Level 2 End-point Assessment for ST0242_03 Land-Based Service Engineer (9201-12, -22, -32, -42, -52)

January 2019 V1.0

End-Point Assessment Pack

For Independent End-point Assessors

Version and date	Change detail	Section
1.0 January 2019	Document published	

Contents

1	**Introduction**	**8**
	About this apprenticeship occupation	8
	What is in this document	10
	End-point assessments	10
	Grading	10
	Entry requirements for end-point assessment	11
	Gateway – prior to end-point assessment	11
	Remote Assessment	11
	Security, confidentiality & copyright of end-point assessment materials	11
2	**Apprenticeship Occupational Standard**	**13**
3	**End-point assessment guidance for Independent End-Point Assessors (IEPAs)**	**16**
	Introducing the end-point assessments to the apprentice	16
	Health and safety / Codes of practice	16
	Authenticating the apprentices work	17
	Recording forms	17
	Determining the apprenticeship grade	17
	Sharing of results with apprentices	18
	Results submission and Certification	18
	Feedback	18
	Opportunities to retake/resit or improve results for end-point assessments	18
4	**End-Point Assessment Resources list**	**20**
5	**End-point assessment timeline**	**34**
Assessment 201	**Assessment components title – externally marked test**	**35**
	Assessment specification	35
Assessment 700/750, 702/752, 704/754, 706/756, 708/758	**Practical Observation**	**37**
	Assessment specification	37
Assessment 700/750, 702/752, 704/754, 706/756, 708/758	**Practical Observation**	**42**
	Recording forms	42
Assessment 700/750, 702/752, 704/754, 706/756, 708/758	**Practical Observation**	**43**
	Task 1 - Hydraulic system pressure and flow performance test	43
	Task instructions for independent end-point assessors	43
	Task instructions for centres / end-point assessment customers	44
	Task instructions for apprentices	45
	Assessment feedback form	49
Assessment 700/750, 702/752, 704/754, 706/756, 708/758	**Practical Observation**	**50**
	Task 2 - Hydraulic System Pressure and Flow tests	50
	Task instructions for independent end-point assessors	50
	Task instructions for centres / end-point assessment customers	51
	Task instructions for apprentices	52

Assessment feedback form 57

Assessment 700/750, 702/752, 704/754, 706/756, 708/758 Practical Observation 58

Task 3 – Machine appraisal 58
Task instructions for independent end-point assessors 58
Task instructions for centres / end-point assessment customers 59
Task instructions for apprentices 60
Assessment feedback form 65

Assessment 700/750, 702/752, 704/754, 706/756, 708/758 Practical Observation 66

Task 4 - Preparation and pre-delivery inspection (PDI) 66
Task instructions for independent end-point assessors 66
Task instructions for centres / end-point assessment customers 67
Task instructions for apprentices 68
Assessment feedback form 74

Assessment 700/750, 702/752, 704/754, 706/756, 708/758 Practical Observation 75

Task 5 - Carry out a Pre-hire Inspection 75
Task instructions for independent end-point assessors 75
Task instructions for centres / end-point assessment customers 76
Task instructions for apprentices 77
Assessment feedback form 83

Assessment 700/750, 702/752, 704/754, 706/756, 708/758 Practical Observation 84

Task 6 - Remove, replace and tension a belt 84
Task instructions for independent end-point assessors 84
Task instructions for centres / end-point assessment customers 85
Task instructions for apprentices 86
Assessment feedback form 93

Assessment 700/750, 702/752, 704/754, 706/756, 708/758 Practical Observation 94

Task 7 - Remove replace and adjust a roller chain 94
Task instructions for independent end-point assessors 94
Task instructions for centres / end-point assessment customers 95
Task instructions for apprentices 96
Assessment feedback form 101

Assessment 700/750, 702/752, 704/754, 706/756, 708/758 Practical Observation 102

Task 8 - Overhaul wheel hub containing taper roller bearings 102
Task instructions for independent end-point assessors 102
Task instructions for centres / end-point assessment customers 103
Task instructions for apprentices 104
Assessment feedback form 110

Assessment 700/750, 702/752, 704/754, 706/756, 708/758 Practical Observation 111

Task 9 - Set Tractor Wheel Widths 111
Task instructions for independent end-point assessors 111
Task instructions for centres / end-point assessment customers 112
Task instructions for apprentices 113

Assessment feedback form 118

Assessment 700/750, 702/752, 704/754, 706/756, 708/758 Practical Observation 119

Task 10 - Coolant System Test 119
Task instructions for independent end-point assessors 119
Task instructions for centres / end-point assessment customers 120
Task instructions for apprentices 121
Assessment feedback form 127

Assessment 700/750, 702/752, 704/754, 706/756, 708/758 Practical Observation 128

Task 11 – Set Engine Valve Clearances 128
Task instructions for independent end-point assessors 128
Task instructions for centres / end-point assessment customers 129
Task instructions for apprentices 130
Assessment feedback form 134

Assessment 700/750, 702/752, 704/754, 706/756, 708/758 Practical Observation 135

Task 12 - Set up drive line components 135
Task instructions for independent end-point assessors 135
Task instructions for centres / end-point assessment customers 136
Task instructions for apprentices 137
Assessment feedback form 142

Assessment 700/750, 702/752, 704/754, 706/756, 708/758 Practical Observation 143

Task 13 - Sharpen and Reset a Cutting Device 143
Task instructions for independent end-point assessors 143
Task instructions for centres / end-point assessment customers 144
Task instructions for apprentices 145
Assessment feedback form 150

Assessment 700/750, 702/752, 704/754, 706/756, 708/758 Practical Observation 151

Task 14 - Check and adjust track tension 151
Task instructions for independent end-point assessors 151
Task instructions for centres / end-point assessment customers 152
Task instructions for apprentices 153
Task 14 – Check and Adjust Track tension 155
Assessment feedback form 158

Assessment 700/750, 702/752, 704/754, 706/756, 708/758 Practical Observation 159

Task 15 - Dismantle, inspect and re-assemble a hydraulic cylinder 159
Task instructions for independent end-point assessors 159
Task instructions for centres / end-point assessment customers 160
Task instructions for apprentices 161
Assessment feedback form 167

Assessment 700/750, 702/752, 704/754, 706/756, 708/758 Practical Observation 168

Task 16 - Wiring a low voltage, multi pin, plug and socket 168
Task instructions for independent end-point assessors 168
Task instructions for centres / end-point assessment customers 169

Task instructions for apprentices 170
Assessment feedback form 175

Assessment 700/750, 702/752, 704/754, 706/756, 708/758 Practical Observation 176

Task 17 - Check alternator charging system 176
Task instructions for independent end-point assessors 176
Task instructions for centres / end-point assessment customers 177
Task instructions for apprentices 178
Assessment feedback form 183

Assessment 700/750, 702/752, 704/754, 706/756, 708/758 Practical Observation 184

Task 18 - Measure Worn Components 184
Task instructions for independent end-point assessors 184
Task instructions for centres / end-point assessment customers 185
Task instructions for apprentices 186
Assessment feedback form 192

Assessment 700/750, 702/752, 704/754, 706/756, 708/758 Practical Observation 193

Task 19 - Prepare to carry out a manufacturers scheduled service 193
Task instructions for independent end-point assessors 193
Task instructions for centres / end-point assessment customers 194
Task instructions for apprentices 195
Assessment feedback form 200

Assessment 700/750, 702/752, 704/754, 706/756, 708/758 Practical Observation 201

Task 20 - Locate and rectify a wiring fault in an electrical circuit 201
Task instructions for independent end-point assessors 201
Task instructions for centres / end-point assessment customers 202
Task instructions for apprentices 203
Assessment feedback form 209

Assessment 700/750, 702/752, 704/754, 706/756, 708/758 Practical Observation 210

Task 21 - Remove, inspect and re-build multi plate friction slip clutch 210
Task instructions for independent end-point assessors 210
Task instructions for centres / end-point assessment customers 211
Task instructions for apprentices 212
Assessment feedback form 218

Assessment 700/750, 702/752, 704/754, 706/756, 708/758 Practical Observation 219

Task 22 – Make an item 219
Task instructions for independent end-point assessors 219
Task instructions for centres / end-point assessment customers 220
Task instructions for apprentices 221
Assessment feedback form 226

Assessment 700/750, 702/752, 704/754, 706/756, 708/758 Practical Observation 227

Task 23 - MIG/MAGS welding 227
Task instructions for independent end-point assessors 227
Task instructions for centres / end-point assessment customers 228

Task instructions for apprentices 229
Assessment feedback form 236
Assessment 700/750, 702/752, 704/754, 706/756, 708/758 Practical Observation 237
Task 24 - Oxy-Fuel Cutting 237
Task instructions for independent end-point assessors 237
Task instructions for centres / end-point assessment customers 238
Task instructions for apprentices 239
Assessment feedback form 245
Assessment 700/750, 702/752, 704/754, 706/756, 708/758 Practical Observation 246
Task 25 - MMA welding 246
Task instructions for independent end-point assessors 246
Task instructions for centres / end-point assessment customers 247
Task instructions for apprentices 248
Assessment feedback form 253
Assessment 701/751, 703/753, 705/755, 707/757, 709/759 Professional Interview 254
Assessment specification 254
Assessment 701/751, 703/753, 705/755, 707/757, 709/759 Professional Interview 255
Recording forms 255
Assessment 701/751, 703/753, 705/755, 707/757, 709/759 Professional Interview 256
Task instructions for independent end-point assessors 256
Task instructions for centres / end-point assessment customers 259
Task instructions for apprentices 261
Apprenticeship assessment results sheet 263
5 Appendices 265

1 Introduction

About this apprenticeship occupation

This EPA pack has been designed to assess all requirements as stipulated in the Level 2 Land-based Service Engineer assessment plan version ST.

Land-based Service Engineers will typically work on the employers premises under supervision and where appropriate and safe to do so work on their own initiative. They work on a diverse range of tasks and machinery, plant and equipment specific to their sector within the land-based engineering industry. For example these may include:

- Preparation of new and second-hand machinery • for sale or hire
- Pre-delivery inspection of machinery carried out in accordance with manufacturer's and employer's procedures
- Performing routine service and maintenance operations in accordance with manufacturer's schedules and employer's instructions
- The preparation of equipment for repair for example, cleaning, dismantling and reassembly of machinery and their component parts, this may be carried out under supervision or in accordance with procedures or written briefs
- Conducting routine machine operation and systems testing.
- Handing over machinery plant and equipment to the control and use of others in the workplace. For example a senior technician.

These operations typically take place under the supervision of a senior technician in the workplace or on the customer's site, in which case work may be undertaken outdoors. The nature of the job role presents challenges ranging from routine maintenance to the repair of elementary mechanical faults.

This requires a diverse blend of skills, industry underpinning knowledge and the disciplines required for environmental and safe working practice.

Reference to assessment plan STO242/03

Pathways

This apprenticeship standard has five endorsed pathways and the certificates achieved for the EPA are endorsed with the pathway title. Apprentices must be registered on the appropriate pathway as the practical tasks and professional interview will be contextualised to the pathway. Below is a list of each pathway with its corresponding component numbers:

POS	Title	Rule of combination
9201-12	Level 2 End-point Assessment for Land-based Service Engineer (Agriculture)	Apprentices must achieve: (500) or (550) and/or (551) Reservation Request component (700 Practical Observation and 701 Professional Interview) or (750 Practical Observation Resit and/ or 751 Professional Interview Resit) End-

		point assessment element – accessed through the Reservation Request (500, 550 or 551) Plus (201) – End-point multiple choice knowledge tests.
9201-22	Level 2 End-point Assessment for Land-based Service Engineer (Arboriculture and Forestry)	Apprentices must achieve: (501) or (552) and/or (553) Reservation Request component (702 Practical Observation and 703 Professional Interview) or (752 Practical Observation Resit and/ or 753 Professional Interview Resit) End-point assessment element – accessed through the Reservation Request (501, 552 or 553) Plus (201) – End-point multiple choice knowledge tests.
9201-32	Level 2 End-point Assessment for Land-based Service Engineer (Ground Care)	Apprentices must achieve: (502) or (554) and/or (555) Reservation Request component. (704 Practical Component and 705 Professional Interview) or (754 Practical Observation Resit and/ or 755 Professional Interview Resit) End-point assessment element – accessed through the Reservation Request (502, 554 or 555) Plus (201) – End-point multiple choice knowledge test.
9201-42	Level 2 End-point Assessment for Land-based Service Engineer (Fixed Plant and Storage)	Apprentices must achieve: (503) or (556) and/or (557) Reservation Request component. (706 Practical Observation and 707Professional Interview) or (756 Practical Observation Resit and/ or 757 Professional Interview Resit) End-point assessment element – accessed through the Reservation Request (503, 556 or 557) Plus (201) – End-point multiple choice knowledge test.
9201-52	Level 2 End-point Assessment for Land-based Service Engineer (Construction Plant Maintenance)	Apprentices must achieve: (504) or (558) and/or (558) Reservation Request component (708 Practical Observation and 709 Professional Interview) or (758 Practical Observation Resit and/ or 759 Professional Interview Resit) End-

		point assessment element – accessed through the Reservation Request (504, 558 or 559) Plus (201) – End-point multiple choice knowledge test.

What is in this document

- The occupational standard
- Resource requirements for end-point assessment
- Timeline for end-point assessment
- End-point assessment tasks and guidance on grading
- Guidance for the independent end-point assessor

This document must be used alongside the **End-Point Assessment Recording Forms for Independent End-Point Assessors** document

End-point assessments

The focus of the end-point assessment is for the apprentice to fully demonstrate the values, knowledge, skills and behaviours set out in the apprenticeship standard and to be able to demonstrate this level of professional competence in authentic workplace contexts.

End-point assessments are formal summative assessments that conclude an apprenticeship programme. Each apprenticeship will be assessed in a number of ways to provide a clear indication of the apprentice's knowledge and skills. For this apprenticeship the following assessment methods need to be achieved:

- Knowledge test – multiple choice questions
- Practical tasks
- Professional interview

Having achieved the gateway the EPA assessments are to be undertaken in the sequence as detailed below.

1) On-line test
2) Practical tasks
3) Professional interview

All three elements of the assessment are to be undertaken within 6 months of the achievement of the gateway within the apprenticeship.

A minimum of a 'pass' is to be achieved before progressing to the next element of the EPA assessment.

This pack contains specific guidance around the assessments of the Level 2 Land-based Service Engineer, for an overview summary of all assessment methods that could be used as part of end-point assessment please see the Independent End-Point Assessor Manual.

Grading

This apprenticeship is graded Pass, Merit and Distinction. End-point assessments will be assessed and graded by City & Guilds independent end-point assessors, more information about how each assessment is graded and how the overall apprenticeship grade is determined can be found in later sections of this document.

Entry requirements for end-point assessment

To be eligible for end-point assessment the apprentice must have successfully achieved the following:

- Typical duration for the apprenticeship 18 – 24 months
- Employers set the selection criteria for their apprentices. Typically this will include English and mathematics GCSE's at Grade C or equivalent.
- In addition it is desirable that the apprentice has a basic understanding of Information and Communication Technology.
- Apprentices without level 1 English and maths will need to achieve this level and take the tests for level 2 English and maths prior to taking the end point assessment

Gateway – prior to end-point assessment

When all on-programme content has been completed, the employer and/or training provider are required to sign-off the apprentice as being ready to undertake the end-point assessment. In order to do this, they will be required to submit a **City & Guilds End-Point Assessment Gateway Declaration form**. This confirms that the apprentice has acquired the required knowledge, skills and behaviours, along with any mandatory qualifications. Each occupation has a specific Gateway Declaration form.

Completed Gateway Declaration forms are submitted to City & Guilds as part of the booking process and are checked by the End-point assessment team, prior to the allocation of an IEPA to undertake the assessments.

Remote Assessment

Remote assessment is live assessment that is supported by technology where the independent end-point assessor and the apprentice are not in the same physical location when the assessment takes place

Remote assessment is not permitted for any end-point assessments within this Apprenticeship.

Security, confidentiality & copyright of end-point assessment materials

The content of this document is, unless otherwise indicated, © The City and Guilds of London Institute and may not be copied, reproduced or distributed without prior written consent. However, approved City & Guilds centres or end-point assessment customers and apprentices studying for City & Guilds end-point assessment may photocopy this document free of charge. The Standard Copying Conditions (see the City & Guilds website) also apply.

Additional conditions of use City & Guilds End-Point Assessment Materials for Independent End-Point Assessors are protected by copyright and are supplied only to Independent End-Point Assessors for use solely for the purpose of summative assessment.

The following conditions, which apply to City & Guilds Assessment Materials, are additional to:

- **the Standard Copying Conditions** which can be found at **http://www.cityandguilds.com/142.html**; and
- (where the City & Guilds Assessment Materials are dated examinations), the JCQ Instructions for Conducting Examinations.

The Independent End-Point Assessor must: ·

- only use the City & Guilds End-Point Assessment Materials in formal, summative end-point assessment leading to the award of an apprenticeship and not for any other purpose (including, but not restricted to, teaching, revision, as practice assessments or for commercial purposes).

- handle and store securely the City & Guilds End-point Assessment Materials in accordance with the following conditions -
    - City & Guilds End-Point Assessment Materials must be accessible to apprentices only during formal end-point assessment as governed by the assessment conditions specified for the individual apprenticeship; -
    - The portfolio of the apprentice may contain assessment results referenced to the assessment taken but should not contain the City & Guilds End-Point Assessment Materials (such as assessment tasks or questions or marked scripts if the tests may be reused (unless otherwise stated));-
    - The content of any City & Guilds End-Point Assessment Materials must not be made public in any format, either in part or in full; -
    - City & Guilds End-Point Assessment Materials must be securely handled and under no circumstances shared with third party organisations (including centres and employers) or individuals.

2 Apprenticeship Occupational Standard

Service engineers will have a thorough knowledge and understanding of:
How to comply with the Health & Safety at Work Act, Manual Handling regulations, the abrasive wheel regulations and the legislation relevant to the role of Service Engineer.
The company staff handbook, the chain of command, workplace procedures e.g. Daily time sheets, job cards, parts requisitions processes, use of pre-delivery procedures and maintenance schedules.
How to record information, maintain accurate customer service records and communicate with customers and colleagues using verbal and handwritten methods whilst observing customer care practices.
Workshop practices, the identification and application of tools and equipment used in service and maintenance operations. This will typically include knowledge of the care and storage of tools and equipment.
Methods of thermally and chemically joining metals and components. This knowledge will be used in the context of performing service and maintenance operations to machinery and equipment.
The operating principles of machinery, plant and equipment within the chosen land-based service engineering sector.
Underpinning service, maintenance and repair principles and practices, typically including machinery and component conformity procedures, tolerances, pre-load, end float, backlash, component sealing, system bleeding, alignment, balance, calibration, removal of corroded components etc.
How to access and interpret technical data relating to machinery and equipment service and maintenance operations.
How to handover machinery, plant and equipment to the control and use of others in the workplace.
Emergency First Aid.

Skills: The Service Engineer will have the ability to
Select and apply appropriate tools and equipment, demonstrate dexterity, resourcefulness, and a professional approach to service engineering practice.

Skills: The Service Engineer will have the ability to
Maintain and conduct basic repairs and maintenance activities on power units, and power trains, mechanical equipment, plant and machinery and their associated systems and components either under supervision or following procedures and service schedules prepared by the manufacturer or employer.
Thermally and chemically join metals and materials.
Access and interpret technical data relating to service and maintenance operations in accordance with the manufacturer's documentation.
Communicate with customers and colleagues expressing technical information in clear concise terms whilst demonstrating customer care principles.
Work efficiently both under supervision, individually and as a team member.
Demonstrate a logical, safe and systematic approach to work practices.
Carry out operational tests on low technology plant, equipment and machinery.
Communicate using a range of methods. This will include delivering oral and written reports to colleagues and customers regarding the work carried out on equipment

Occupational Behaviours: Land-based Service Engineering 'Service Engineers' are require to have a set of behaviours that will ensure success both in their role and in the overall company objectives, the required behaviours are:	
Safety Orientation:	A disciplined approach to compliance with Health and Safety
Quality Focused:	Follows instructions and guidance, demonstrates attention to detail
Communicator:	An open and honest communicator who recognises the need to use appropriate communication methods to express and receive information accurately in a timely positive and respectful manner.
Team Player:	Can work on their own initiative but also interacts and communicates

Occupational Behaviours: **Land-based Service Engineering 'Service Engineers' are require to have a set of behaviours that will ensure success both in their role and in the overall company objectives, the required behaviours are:**	
Willingness to Learn:	Can reflect on skills, knowledge and behaviours and seek opportunities to develop, adapt to different situations, environments or technologies and have a positive attitude to feedback and advice. Pays attention asks questions when supervisory instructions are not understood and recognises the limitations of personal responsibility.

3 End-point assessment guidance for Independent End-Point Assessors (IEPAs)

Introducing the end-point assessments to the apprentice

The employer/training provider should have made the apprentice aware of the different assessment methods that make up the end-point assessment of the apprenticeship prior to the gateway process.

For this apprenticeship the following assessment methods will be introduced to the apprentice by the employer/training provider.

- Knowledge test – Online Multiple Choice

The specific details around what the employer/training provider will share with the apprentice and the timelines can be found in the **Task Instructions for Centres/Employers** sections within this document. When introducing any assessments it is expected that employer/training providers set a realistic timeframe for completion of each assessment, and that this should align with any timeline agreed with City & Guilds when booking end-point assessment. If assessments are not completed within the agreed timeframe without the apprentice having a good reason, the timeline for any independent end-point assessment visit may be reviewed. City & Guilds End-Point Assessment team would liaise with IEPAs directly around this.

For any assessments that occur over a longer duration employers/training providers are expected to work with apprentices to develop a submission schedule that aligns with the overall timeline for assessments and with any timelines agreed with City & Guilds when booking end-point assessment

For this apprenticeship IEPAs are required to introduce the details of the task to the apprentice

- Practical Tasks
- Professional Interview

The specific details of what should be shared and when can be found in the **Task Instructions for Independent End-Point Assessors** sections of within this document. When sharing any details of the assessments it is important that IEPAs are confirming a realistic timeframe for when tasks should be completed. If tasks are not completed within the agreed timeframe without the apprentice having a good reason, IEPAs should notify the EPA team, the timeline for any Independent end-point assessment visit may be reviewed.

Health and safety / Codes of practice

The importance of safe working practices, the demands of the Health and Safety at Work Act and any Codes of Practice associated with the industry **must** always be adhered to.

The requirement to follow safe working practices is an integral part of all City & Guilds assessments, and it is the responsibility of the training provider/employer to ensure that all relevant health and safety requirements are in place when working on any projects or before apprentices begin any practical assessment.

Should an apprentice fail to follow correct health and safety practices and procedures during practical assessment, IEPAs should **stop the assessment** and advise the apprentice of the reasons why. The

apprentice should be informed that they have not reached the standard of assessment required. It is at your to confirm whether the end-point assessment can restart.

Should IEPAs identify something, when assessing evidence submitted for the apprenticeship or pick up on something during an oral assessment that indicates that health and safety practices and procedures may not have been adhered to, IEPAs should feed this back to the City & Guilds end-point assessment team.

Authenticating the apprentices work

When making judgements on evidence of unobserved tasks, IEPAs must ensure all decision satisfy VACS. For evidence produced outside controlled conditions the apprentice will be required to

- sign a declaration that the work is their own
- reference all sources.

The training provider/employer should also aid authentication by:

- supplementary (oral) questioning to gauge familiarity with the topic
- looking out for any changes to the apprentices usual writing style, unusual sources/examples or the use of e.g. US spellings or phrases that might indicate cutting and pasting from the internet
- requiring access to evidence of steps in the process e.g. drafts, notes, planning etc.

For further information on authenticating work, see: **www.ofqual.gov.uk/plagiarism-teachers**

City & Guilds have produced evidence reference forms for both apprentices and IEPAs to use when reviewing evidence produced outside of controlled conditions. These forms, include a declaration of authenticity form, and must be completed when submitting evidence. These forms can be found in the **EPA recording forms for end-point assessment customers/employers/training provider's document**. These should be completed and signed by both the tutor/employer and the apprentice.

Recording forms

City & Guilds have designed specific recording forms for this apprenticeship, some for centres/employers/training providers to use, and some for IEPAs to use.

These can be found in the following documents:

End-point Assessment Recording Forms for Independent End-Point Assessors

End-point Assessment recording forms for centres/end-point assessment customers

Centres must use the forms provided by City & Guilds in the format laid out in this document.

IEPAs should ensure that any notes are recorded on these forms are recorded in a way that another assessor who was not present at the assessment can clearly see why grading/marking decisions have been made.

Determining the apprenticeship grade

IEPAs are responsible for grading all tasks, apart from any online tests, and communicating these outcomes to City & Guilds. IEPAs are also responsible for determining the overall grade of the apprenticeship.

The Independent Assessment Organisation will determine the overall grading of the apprenticeship, by considering the grading achieved in each of the three EPA's and the accumulated total of points associated with the grading.

Individual EPA Grade achieved	Points Awarded	Apprenticeship Grading	Accumulated Points Range
Pass	1	Pass	3-5
Merit	2	Merit	6-7
Distinction	3	Distinction	8-9

A table designed to support IEPAs working out the overall grade for the apprenticeship can be found in the assessment results sheet section of this document.

Sharing of results with apprentices

IEPAs should not share any individual results or provide any feedback with apprentices, end-point assessment customer, employers or training providers during any assessment, immediately following or between the different assessments that make up the end-point assessment.

Results submission and Certification

IEPAs are responsible for submitting apprentice's results to City & Guilds. City & Guilds will issue an end-point assessment record of achievement confirming the grade achieved and will notify the appropriate body who will issue the Apprenticeship certificate.

Feedback

IEPAs are required to provide written feedback for any apprentice that fails their end-point assessment. Written feedback must be captured on the City& Guilds Apprentice Feedback form. The Apprentice feedback form can be found in the **End-Point Assessment Recording Forms for Independent End-Point Assessors** document. Written feedback should highlight strengths and weaknesses and outline which aspects of the standard/assessment were not met.

If apprentices have achieved the end-point assessment as default will not be provided other than confirmation of results. If an end-point assessment customers specifically request feedback these will be viewed as an exception and decisions and decisions around this made on a case by case basis. If it is agreed to provide feedback the End-Point Assessment team will contact IEPAs directly and request that this is completed. It is expected that IEPAs would use the information captured in the recording forms to draft the feedback to the apprentice.

Opportunities to retake/resit or improve results for end-point assessments

An apprentice who passes the end-point assessment cannot re-sit to achieve a higher grade.

If an apprentice fails the any part of the end-point assessment they should not retake the end-point assessment until they have completed a period of further learning or training and the employer and training provider (if applicable) is confident the apprentice is competent. A separate end-point assessment resit booking will need with City & Guilds for the relevant assessment.

If an apprentice fails any part of the end-point assessment for reasons out of their control, a resit can be booked at the earliest opportunity.

In the case of the assessment being failed for a second time a further period of study will be required with a retake not being possible within 6 months of the second failure.

4 End-Point Assessment Resources list

Resource required	
Online test	Suitable IT systems for evolve as outlined in the manual for end-point assessment services
	An invigilator
	A quiet room with adequate lighting, space and privacy. It must be away from the pressures of work activities, in a controlled environment. This may be on or off the employers' premises
Professional Interview	A suitable room for the professional discussion/interview to take place, large enough to accommodate all those involved including panel member where applicable
	Seating area or room for any other apprentices to wait
	Access to water and cups
	Where applicable, internet access and suitable equipment for remote assessment as outlined in the manual for end-point assessment services
Practical Tasks	**Task 1: Hydraulic system pressure and flow performance** **Site/ workshop requirements:** Exhaust extraction facility if test carried out indoors Safe working area Appropriate PPE **Equipment/ machinery:** Working machine with a hydraulic circuit applicable to the industry sector the apprentice is studying. Comprehensive tool kit Oil Flow Meter, pressure gauge and temperature gauge or appropriate electronic testing equipment appropriate to connecting to and testing the machine Stop watch Oil drip tray or drain can **Consumables:** Hydraulic oil Fuel Cleaning materials Environmental spill kit **Documents:** Hydraulic Flow and pressure performance recording form Manufacturers reference data for the machine being tested Risk assessment documentation

	Task 2: Hydraulic system pressure and flow test (Construction Plant only) **Site/ workshop requirements:** Safe working area for machine testing. Selection of PPE **Equipment/ machinery:** Working machine with a hydraulic circuit applicable to the route the apprentice is studying eg tractor, wheel loader, dump trucks, Excavator, back hoe loader, tele handler, Track type Tractor Hand tools Workshop engineer toolbox Diagnostic Test Gauges Flow meter/stop watch Infrared thermometer/oil temperature thermometer Drip Trays **Consumables:** Hydraulic oil for topping up hydraulic tank Absorbent mats for oil spillage Hand wipes Cleaning materials **Documentation:** Recording form Access to Manufacturer service information
	Task 3: Machine appraisal Site/ workshop requirements: Comprehensive tool kit Workshop tooling required to complete the task Inspection lamp Crawler board **Equipment/ machinery:** Second-hand or used machine Consumables: Report form and checklist Cleaning materials **Documentation:** Risk assessment completed by a competent person for the task.
	Task 4: Preparation and pre-delivery inspection (PDI) **Site/ workshop requirements:** Exhaust extraction facility if running tests carried out indoors. Safe working area. Range of Appropriate PPE.

	Equipment/ machinery: Machine suitable for task Comprehensive tool kit Any specialist equipment required for the task Suitable Jacks and axle stand's. Oil drip tray. **Consumables:** Suitable oils and greases. Cleaning materials. Environmental spill kit. **Documents:** Manufacturer's reference data and information for the machine Risk assessment documentation. PDI Check sheet
	Task 5: Carry out a Pre-hire Inspection **Site/ workshop requirements:** Exhaust extraction facility if running tests carried out indoors. Safe working area. Range of Appropriate PPE. **Equipment/ machinery:** Machine suitable for task Comprehensive tool kit Any specialist equipment required for the task Suitable Jacks and axle stand's. Oil drip tray. **Consumables:** Suitable oils and greases. Cleaning materials. Environmental spill kit. **Documents:** Manufacturer's reference data and information for the machine Risk assessment documentation. Pre-hire Inspection sheet
	Task 6: Remove, replace and tension a belt **Site/ workshop requirements:** Safe working area. **Equipment**: Machinery with a belt drive system appropriate to the apprentice's pathway eg: Agricultural machinery, fixed plant etc.

	PPE Special tooling appropriate to the task being undertaken Comprehensive tool kit Measuring equipment Chocks to stop the machine rotating **Materials:** Spare belt for the machinery being used. Cleaning materials **Documentation:** Manufacturer's reference data for the equipment Risk assessment documentation.
	Task 7: Remove, replace and adjust a roller chain **Equipment:** Machinery with a chain drive system appropriate to the pathway eg: Agricultural machinery, fixed plant etc. Personal Protective Equipment (PPE) Any equipment/tools appropriate to the task being undertaken e.g. standard tool kit, specialist spanners, etc. **Materials:** Spare chain links for the machinery being used. **Documentation:** Manufacturer's reference data for the equipment Risk assessment documentation.
	Task 8: Overhaul wheel hub containing taper roller bearings **Site/ workshop requirements:** Safe working area. Appropriate PPE **Equipment/ machinery:** A machine/ equipment with taper rolling bearings / wheel bearings. Comprehensive tool kit Torque wrench Lifting and jacking equipment. Axle stands Grease gun DTI gauge. Feeler gauges. Drip tray. Micrometre / Vernier gauge calliper **Consumables:**

	Oil can, oil and grease. Shims and spare bearings and seals. Sundry items, grease nipples, split pins Cleaning materials Parts washer **Documentation:** Manufacturer's reference data for the equipment / rig. Job card. Risk assessment documentation.
	Task 9: Set tractor wheel widths **Equipment:** A Clean Tractor that has adjustable front wheels. PPE, any equipment/tools appropriate to the task being undertaken e.g. wheel chocks, jack and axle stands appropriate for the size of the machine. Air wrench, torque wrenches and sockets suitable for the size of the task. Measuring equipment to check wheel setting. Suitable wheel moving devise if required Operators manual or equivalent showing wheel width settings **Materials:** Sufficient replacement wheel bolts and nuts and washers in case any are damaged **Site:** Workshop **Documentation:** Manufacturer's reference data for the equipment/rig. Risk assessment documentation. Job Story card.
	Task 10: Coolant system test **Site/ workshop requirements:** Safe working area. Appropriate PPE **Machinery/ equipment:** Operational liquid cooled internal combustion engine. Selection of thermostats Comprehensive tool kit Torque wrench. Coolant tester. Cooling System & Radiator Pressure tester. Kettle and container suitable for externally testing thermostat. Temperature gauge. Drip tray.

	Consumables: Spill kit Cleaning materials Coolant Spare hose clips if required. **Documentation:** Manufacturer's reference data for testing cooling system. Report sheet.
	Task 11: Set engine valve clearances **Site/ workshop requirements:** Comprehensive tool kit Exhaust extraction facility if required Safe working area Appropriate PPE **Equipment/ machinery:** 3 or 4 cylinder internal combustion engine, either in machine or on a test rig Specialist equipment appropriate to the task Measuring equipment suitable for task **Consumables:** Cleaning materials Environmental spill kit **Documents:** Recording form Manufacturers reference data for the engine/machine being tested Risk assessment documentation
	Task 12: Set drive line components **Site/ workshop requirements:** Comprehensive tool kit Appropriate PPE. **Equipment/ machinery:** Component or rig with a bevelled/ angled gear arrangement. DTI gauge. Rolling resistance gauge or spring balance and cord. Feeler gauges. Oil drip tray or drain can. Cleaning materials/ parts washer Environmental spill kit. Micrometer, Vernier gauge calliper

	Consumables: Oil. Spare bearings and oil seals. Shims. Engineers Blue. **Documents:** Manufacturers reference data. Risk assessment documentation. Manufacturers repair data.
	Task 13: Sharpen and reset a cutting device **Site/ workshop requirements:** Comprehensive tool kit and measuring equipment. Service information for the machine being worked on. Weighing equipment to weigh blades **Equipment/ machinery:** Machine with a cutting device applicable to the pathway the candidate is studying. **Consumables:** Sharpening equipment suitable for task Any specialist equipment needed for the machine / equipment being worked on **Documents:** Risk assessment documentation. Manufacturers repair data. Job story card.
	Task 14: Check and adjust track tension **Resource list for task** **Site/ workshop requirements:** Safe working area for machine testing. Selection of PPE Comprehensive tool kit Track measurement equipment or specialist tooling to complete the task Any specialist equipment required to perform the task Access to Manufacturer service information **Equipment/ machinery:** Machine type for assessment (with mal adjusted tracks): Track Type Tractor, Excavator, Track Type Loader, utility vehicle as appropriate **Consumables:** Cleaning materials **Documentation:**

	Report sheet Risk assessment documentation.
	Task 15: Dismantle, inspect and re-assemble a hydraulic cylinder **Site/ workshop requirements:** Safe working area Appropriate PPE **Equipment/ machinery:** Comprehensive tool kit A range of hydraulic cylinders, no more than 20kg in weight Spare seals and fixings etc. are to be on hand Equipment/tools appropriate to the task being undertaken **Consumables:** Cleaning materials Environmental spill kit **Documents:** Report sheet Manufacturers reference data for the cylinders/machine being dismantled/assembled
	Task 16: Wiring a low voltage, multi pin, plug and socket **Site/ workshop requirements:** A suitable workplace with a bench or table **Equipment/ machinery:** Comprehensive tool kit Multi pin plug, socket Trailer lighting board Vehicle with 7 pin socket Selection of wiring scrap wiring harnesses Length of colour coded multi strand wire A wiring diagram for the plug and socket Testing facilities for plug and socket Multi-meter Continuity tester Small screwdrivers Terminal pin removal tool Wire stripping pliers Crimping tool Soldering iron and solder Stanley knife **Consumables:** Spare plugs and sockets Water proofing grommets if applicable to the task be assessed

	Length of trailer board cable Multi strand colour coded wire **Documents:** Manufacturer's reference data Risk assessment documentation
	Task 17: Check alternator charging system **Workshop equipment** Exhaust extraction **Equipment:** Selection of PPE appropriate and inappropriate for the task Comprehensive tool kit Range of electrical test equipment, multi-meter, volt meter, amp meter, Spare battery for machine Spare batteries for test equipment Any equipment/tools appropriate to the task being undertaken e.g. standard tool kit, specialist equipment, etc. **Materials:** A range of machines with alternator charging systems appropriate to the apprentice's industry sector capable of starting and running, fuelled to complete the task **Consumables** Sundry electrical connectors, dash light bulbs etc Wire Cleaning materials
	Task 18: Remove and replace worn parts **Site/ workshop requirements:** Comprehensive tool kit **Equipment/ machinery:** A range of measuring equipment both suitable and unsuitable for the measurements to be taken. This requirement is to ensure the apprentice uses their judgement to choose the correct equipment to use rather than just being provided with the correct equipment Worn machine parts, sub-assemblies or components applicable to the route being studied, e.g: engine components, hydraulic components, shafts, pulleys, soil engaging parts blades, shear-bars etc. **Consumables:** Cleaning materials Spill kit **Documentation**

	Manufacturer's technical reference data for the machine, sub assembly or component being worked on. Test result recording form
	Task 19: Prepare to carry out a manufacturers scheduled **Site:** Workshop **Equipment** Machine to be serviced PPE Special equipment / tools specific to the machine used in the task Comprehensive tool kit Torque wrench and selection of appropriate sockets Various size drain tins and measuring jugs Inspection lamp Crawler board Cleaning materials **Materials:** A pre-prepared job card Report sheet Cleaning materials Spillage kit in case of oil leaks Relevant manufacturers reference data both parts and service for the machine specified **Documents:** Recording form Manufacturers reference data Risk assessment documentation A pre-prepared work shop job card
	Task 20: Locate and rectify a wiring fault in an electrical circuit **Site/ workshop requirements** Exhaust extraction facility Appropriate PPE **Equipment/ machinery:** Machine or suitable rig to carry out fault finding activity Comprehensive tool kit Test Equipment.eg Multi-meter, volt meter, amp meter and heavy discharge tester **Consumables:** Assorted spare electrical terminals and electrical wiring Electrical sundries e.g. fuses and bulbs Spare Battery

	Documents: Manufactures data, wiring diagram or repair manual as appropriate to the task Report sheet
	Task 21: Remove, inspect and re-build multi plate friction slip clutch **Site/ workshop requirements:** A suitable workplace which is quiet and not subject to disturbances. **Equipment/ machinery:** Suitable machine fitted with multi plate friction slip clutch Comprehensive tool kit Measuring devices for springs and plates Manufactures reference data and procedure for setting up slip clutch **Consumables:** Nuts, bolts, setscrews Guards Plates and springs for direct replacement for any damaged during assessment **Documents:** Manufacturers reference data Risk assessment documentation
	Task 22: Make an item **Site/ workshop requirements:** Work area suitable for making the item Bench with engineers vice Suitable PPE **Equipment/ machinery:** Bench grinder 4 ½ " Angle grinder Metal clamps for holding metal Range of engineers files Hammer Chisel Centre punch Dividers Marking out materials Engineers steel rule Scriber Zeus tables or drilling and tapping charts Metric tap and die set Comprehensive range of metric drills up to 12mm Pedestal drill with clamp or vice Hacksaw

	Engineer's surface plate 90° angle plate for surface plate Engineers scribing block Vernier callipers Soft jaws for vice **Consumables:** Plate measuring 100 x 100 x 6 mm, accurately cut and square for apprentice Engineer's layout/marking blue Spare hacksaw blades Thread cutting paste Spare M10 taper taps Range of suitable spare drill bits Emery cloth **Documentation:** Risk assessment
	Task 23: MIGS/ MAGS welding **Site/ workshop requirements:** Welding booth with suitable plug for welder and UV protection all around. Fume extraction Water bath **Equipment/ machinery:** MIG/MAGS welder Grinder MIG Pliers Side cutters Metal clamps for holding weld metal PPE suitable to enable the task to be completed Gas pliers for handling hot metal Flat file Engineers square Scriber Engineers steel rule **Consumables:** MIG/MAGS wire to suit the material size Range of contact tips Gas Leak detector Metal for welding, cut for Apprentice Scrap metal suitable for setting up machinery and practice **Documents:** Risk assessment documentation

	Task 24: Oxy-fuel cutting **Site/ workshop requirements:** Work area suitable for gas cutting Metal bench or cutting table Fume extraction Water bath **Equipment/ machinery:** Gas bottles on trolley equipped with cutting torch and a range of nozzles Grinder Clamps for holding metal PPE to include cutting goggles, gloves, clear eye protection, cutting apron. Gas pliers for handling hot metal Hammer Chisel Centre punch Engineers French chalk Soft chalk Dividers Engineers steel rule Scriber Engineers square Nozzle cleaners Gas spanner Cutting chart **Consumables:** Plate measuring 180 x 150 x 4 mm, Scrap metal suitable for setting up cutting set and practice Spare cutting nozzles and cleaning kit Leak detector **Documents:** Risk assessment documentation
	Task 25: MMA welding **Site/ workshop requirements:** Welding booth with suitable plug for welder and UV protection all around. Fume extraction Water bath **Equipment/ machinery:** MMA welder either AC or DC . Grinder Flat tile Metal clamps for holding weld metal

	PPE to include various masks and helmets, gloves, clear eye protection, hearing protection Gas pliers for handling hot metal **Consumables:** Range of MMA electrode sizes with box that has amp ranges on Metal for welding cut for Apprentice Scrap metal suitable for setting up machinery and practice **Documents:** Risk assessment documentation

5 End-point assessment timeline

Time line	Activity
On-going prior to completion (a minimum of 12 month period on-programme)	Employer • reviews progress and ensures Apprentices' performance is on track as part of the regular performance management system • Identifies gaps and creates a plan for the end assessment with the Apprentice. Apprentice • completes the English and Maths components of the Apprenticeship • Insert any details around any evidence that needs to be produced during on programme
Gateway process	The Apprentice and line manager/tutor review progress and confirm that the apprentice is ready for end-point assessment. • The employer/training provider submits the completed **Gateway Declaration Form**.
Book end-point assessment in line with City& Guilds booking timelines*	Employer/training provider: • makes end-point assessment booking with City & Guilds • Submit portfolio to IEPA
Completion of assessment tasks	Having achieved the gateway the EPA assessments are to be undertaken in the sequence as detailed below. 1) On-line test 2) Practical tasks 3) Professional interview All three elements of the assessment are to be undertaken within 6 months of the achievement of the gateway within the apprenticeship. A minimum of a 'pass' is to be achieved before progressing to the next element of the EPA assessment. The centre/epa customer must make the online test booking Apprentice must sit the online test

Assessment 201 Assessment components title – externally marked test

Assessment specification

Assessment type: Examiner marked, written exam, usually delivered online*
Assessment conditions: Invigilated examination conditions*
Grading: D/M/P/X
Grade boundaries: Pass = 65%, Merit = 75%, Distinction = 90%

Exam 201	Duration: 1 hour 30 minutes		
Standard ref	**Criteria**	**Number of marks**	**%**
Legislation for the role of service engineer	How to comply with the Health & Safety at Work Act, Manual Handling regulations, the abrasive wheel regulations and the legislation relevant to the role of Service Engineer	4	9
Work place procedures	The company staff handbook, the chain of command, workplace procedures e.g. Daily time, sheets, job cards, parts requisitions processes, use of pre-delivery procedures and maintenance schedules.	2	4
Work shop practices, identification and use of tools and equipment	Workshop practices, the identification and application of tools and equipment used in service and maintenance operations. This will typically include knowledge of the care and storage of tools and equipment.	8	18
Methods of thermally and chemically joining metals and components	Methods of thermally and chemically joining metals and components. This knowledge will be used in the context of performing service and maintenance operations to machinery and equipment.	3	7
Operation principles of machinery, plant and equipment.	The operating principles of machinery, plant and equipment within the chosen land-based service engineering sector.	12	27
Service, maintenance and repair principles and practices	Underpinning service, maintenance and repair principles and practices, typically including machinery and component conformity procedures, tolerances, pre-load, end float, backlash, component sealing, system bleeding, alignment, balance, calibration, removal of corroded components etc.	12	27

Handover of machinery, plant and equipment	How to handover machinery, plant and equipment to the control and use of others in the workplace	3	7
Emergency first aid	Emergency First Aid.	1	2
	Total	**45**	**100**

*These exams are sat under invigilated examination conditions, as defined by the JCQ: **http://www.jcq.org.uk/exams-office/ice---instructions-for-conducting-examinations**.

Entry for exams can be made through the City & Guilds Walled Garden.

Assessment 700/750, 702/752, 704/754, 706/756, 708/758
Practical Observation

Assessment specification

Component	Description	Coverage	Grading
700/750, 702/752, 704/754, 706/756, 708/758	Apprentices will take 3 tasks over a 6 hour day. All tasks have to be passed to pass overall. It is recommended that the assessment is conducted within a training provider's facility away from the apprentice's workplace to avoid distractions. The Independent Assessment Organisation may sanction the use of other facilities which meet their quality assurance requirements During the course of each practical task apprentices will be assessed on their skills, knowledge and behaviours as appropriate to the task.	Skills: 1-9 Knowledge: 1-4, 7-9 Behaviours: 1, 2	P/M/D/X

Grading descriptor table

Fail	Pass	Merit	Distinction
The apprentice has: • failed to interpret the task brief, and has not asked for guidance or clarification • failed to complete the tasks within the allotted time • Used the wrong tools or used them inappropriately • fail to use the appropriate PPE equipment throughout the tasks • Completed the task but omitted parts, left fixtures loose or assembled incorrectly	The apprentice has: • Completed the tasks within the time allocated • Selected and applied the right tools for the task in-hand • Demonstrated dexterity • Asked for guidance and clarification • Displayed the underpinning knowledge required to function in the role. • Can explain what they are trying to achieve and why they are using the approach selected	Demonstrates all the pass criteria and in addition: • Demonstrated a logical ordered approach to the tasks • Displayed logical thinking and appropriate working practices and processes • Gets things right first time • Pays attention to detail • Demonstrates a strong quality focus • Asks questions and seeks clarification when necessary • Reports their findings	Demonstrates all the merit criteria and in addition: • Utilises time efficiently completed the task in 10% less time than the allotted time • Works to an ordered standard in all areas of the task, cleaning and reinstating the work area, putting tools away, checking tasks completed for conformity and against the brief • Produces clear concise documentation and repair recommendations where this is called for • Displays a confident assertive professional approach to the tasks undertaken and those assessing them

Task list and pathways

Task	Pathway
Task 1: Hydraulic system pressure and flow performance	Agriculture Arboriculture and Forestry Ground Care Fixed Plant Storage
Task 2: Hydraulic system pressure and flow test	Construction Plant Maintenance
Task 3: Machine appraisal Note: this task cannot be assessed along with task 4 and task 5. Apprentices can only be assessed on **one** of these tasks if used in the EPA.	Agriculture Arboriculture and Forestry Ground Care Fixed Plant Storage Construction Plant Maintenance
Task 4: Preparation and pre-delivery inspection (PDI) Note: this task cannot be assessed along with task 3. Apprentices can only be assessed on **one** of these tasks if used in the EPA.	Agriculture Arboriculture and Forestry Ground Care Fixed Plant Storage
Task 5: Carry out a Pre-hire Inspection Note: this task cannot be assessed along with task 3. Apprentices can only be assessed on **one** of these tasks if used in the EPA.	Construction Plant Maintenance
Task 6: Remove, replace and tension a belt Note: this task cannot be assessed along with task 7. Apprentices can only be assessed on **one** of these tasks if used in the EPA.	Agriculture Arboriculture and Forestry Ground Care Fixed Plant Storage Construction Plant Maintenance
Task 7: Remove, replace and adjust a roller chain Note: this task cannot be assessed along with task 6. Apprentices can only be assessed on **one** of these tasks if used in the EPA.	Agriculture Arboriculture and Forestry Ground Care Fixed Plant Storage
Task 8: Overhaul wheel hub containing taper roller bearings	Agriculture Arboriculture and Forestry Ground Care Construction Plant Maintenance
Task 9: Set tractor wheel widths	Agriculture Arboriculture and Forestry Ground Care
Task 10: Coolant system test	Agriculture Arboriculture and Forestry Ground Care Fixed Plant Storage Construction Plant Maintenance
Task 11: Set engine valve clearances	Agriculture Arboriculture and Forestry Ground Care

	Fixed Plant Storage Construction Plant Maintenance
Task 12: Set drive line components	Agriculture Arboriculture and Forestry Ground Care Construction Plant Maintenance
Task 13: Sharpen and reset a cutting device	Agriculture Arboriculture and Forestry Ground Care
Task 14: Check and adjust track tension	Construction Plant Maintenance
Task 15: Dismantle, inspect and re-assemble a hydraulic cylinder	Agriculture Arboriculture and Forestry Ground Care Fixed Plant Storage Construction Plant Maintenance
Task 16: Wiring a low voltage, multi pin, plug and socket	Agriculture Arboriculture and Forestry Ground Care Fixed Plant Storage Construction Plant Maintenance
Task 17: Check alternator charging system	Agriculture Arboriculture and Forestry Ground Care Fixed Plant Storage Construction Plant Maintenance
Task 18: Remove and replace worn parts	Agriculture Arboriculture and Forestry Ground Care Fixed Plant Storage Construction Plant Maintenance
Task 19: Prepare to carry out a manufacturers scheduled	Agriculture Arboriculture and Forestry Ground Care Fixed Plant Storage Construction Plant Maintenance
Task 20: Locate and rectify a wiring fault in an electrical circuit	Agriculture Arboriculture and Forestry Ground Care Fixed Plant Storage Construction Plant Maintenance
Task 21: Remove, inspect and re-build multi plate friction slip clutch	Agriculture Ground Care Fixed Plant Storage
Task 22: Make an item	Agriculture Arboriculture and Forestry Ground Care Fixed Plant Storage Construction Plant Maintenance
Task 23: MIGS/ MAGS welding	Agriculture Arboriculture and Forestry Ground Care

	Fixed Plant Storage Construction Plant Maintenance
Task 24: Oxy-fuel cutting	Agriculture Arboriculture and Forestry Ground Care Fixed Plant Storage Construction Plant Maintenance
Task 25: MMA welding	Agriculture Arboriculture and Forestry Ground Care Fixed Plant Storage Construction Plant Maintenance

Assessment 700/750, 702/752, 704/754, 706/756, 708/758
Practical Observation

Recording forms

All recording forms can be found in **Assessment pack recording form** document that is available in a word format. Please see below summary of the recording forms that are available for this assessment.

Recording form	Purpose	Who should complete	Where Can it be found
Task checklist	Recording apprentices marks for each task	IEPA	Within each task
Assessment feedback form	IEPA records Apprentices performance for each task	IEPA	At the end of each task

Assessment 700/750, 702/752, 704/754, 706/756, 708/758
Practical Observation

Task 1 - Hydraulic system pressure and flow performance test

This task is for the following pathways:
Agriculture
Forestry and arboriculture
Ground care
Fixed plant

Task instructions for independent end-point assessors

Before starting the task the apprentice is required to provide a verbal risk assessment which will form part of the assessment.

Apprentices are required to;

- Carry out a hydraulic oil flow and pressure test
- Record the results and compare to the manufacturer's specifications.

The assessment ends when all tooling and equipment is packed away

Apprentice to be provided with relevant machine, test specifications, manufacturer's reference data and test result recording form by centre.

The machine that is used for the assessment should be appropriate for the time allocated.

The centre will provide you and the apprentice with any site and task-specific requirements

The model answers given for oral questions are not an exhaustive list, if applicable other suitable answers may be accepted.

Time for assessment: 1 hour 45 minutes.

Task is achieved at Pass/ Merit/ Distinction/ Fail

Task instructions for centres / end-point assessment customers

Before starting the task the apprentice is required to provide a verbal risk assessment which will form part of the assessment.

Apprentices are required to;

- Carry out a hydraulic oil flow and pressure test
- Record the results and compare to the manufacturer's specifications.

Apprentice to be provided with relevant machine, test specifications, manufacturer's reference data and test result recording form by centre.

You will provide assessor and the apprentice with any site and task specific requirements including a risk assessment.

The machine that is used for the assessment should be appropriate for the time allocated.

Time for assessment: 1 hour 45 minutes.

Task is achieved at Pass/ Merit/ Distinction/ Fail

Task instructions for apprentices

Before starting the task you are required to provide a verbal risk assessment which will form part of the assessment.

Apprentices are required to;

- Carry out a hydraulic oil flow and pressure test
- Record the results and compare to the manufacturer's specifications.

The assessment ends when all tooling and equipment is packed away

You will be provided with relevant machine, test specifications, manufacturer's reference data and test result recording form by centre.

The machine that is used for the assessment should be appropriate for the time allocated.

The centre to provide assessor and the apprentice with any site and task specific requirements including a risk assessment.

Time for assessment: 1 hour 45 minutes.

Task is achieved at Pass/ Merit/ Distinction/ Fail

Apprentice name:

Date:

Machine type for assessment:

All criteria must be achieved and the criteria indicated can be awarded marks based on the descriptors in the table.

Activity number and description	Mark awarded		
	1	**2**	**3**
1. Provide a verbal risk assessment for the task.			
2. Select and use the correct personal protective equipment.			
3. Identify the procedures that are required to carry out the task			
4. Select the correct equipment for the test, set up and use in an appropriate manner			
5. Carry out pressure and flow tests on the hydraulic circuit.			
6. Record findings and compare with manufacturer's reference data			
7. Restore machine, work area and equipment to its per-assessment state			
Q1 – Why is it important to ensure the tests are carried out at the specified oil temperature?			
Q2 - What are the possible causes of hydraulic flow being below manufacture specification?			
Q3 – What controls the maximum pressure in a simple hydraulic circuit?			
Q4- what steps should be taken to avoid contamination in a hydraulic circuit?			
Total	/23		
Grade			
Apprentice signature and date			
Independent Assessor signature and date			

Converting marks to grades	
Grade	**Mark ranges**
Distinction	90% = 19
Merit =	75% = 16
Pass	65% = 14

The marks for each activity should be totalled and the conversion chart used to determine the grade for each task.

Practical observation descriptor table

Task 1 – hydraulic system pressure and flow performance test

		Grading descriptors		
Graded activity number and description from check list		**1 Mark**	**2 Marks**	**3 Marks**
1	Provide a verbal risk assessment for the task.	Apprentice showed a limited understanding of the risk assessment process and risks associated with task.	Apprentice showed a detailed understanding of the risk assessment process and risks associated with task.	Apprentice showed a comprehensive understanding of the risk assessment process and risks associated with task covering personal, environmental and bystander(s).
2	Select and use the correct personal protective equipment.	Apprentice selected and used appropriate PPE required for the task, according to the risk assessment/ site requirements.		
3	Identify the procedures that are required to carry out the task	Apprentice identified the correct procedures to carry out the task using the appropriate information		
4	Select the correct equipment, set up and use in an appropriate manner	Apprentice selected and used appropriate equipment required for the task, according to the manufacturer's procedures.	Apprentice selected and used appropriate equipment required for the task, according to the manufacturer's procedures. Equipment connected avoiding contamination to the system and taking precautions to contain fluid spill	Apprentice selected and used appropriate equipment required for the task, according to the manufacturer's procedures. Equipment connected avoiding contamination to the system and taking precautions to contain fluid spill. Apprentice showed awareness of the calibration of the equipment
5	Carry out pressure and flow tests on the hydraulic circuit.	Completed a basic pressure and flow test	Completed a detailed pressure and flow test following manufacturer's procedures	

6	Record findings and compare with Manufacturer's reference data.	Apprentice recorded the basic test results	Apprentice recorded detailed test results in an appropriate format.	Apprentice recorded comprehensive test results in an appropriate format and provided evidence of comparison with manufacturer's reference data.
7	Restore machine, work area and tools to pre-assessment state.	The candidate cleaned the work area and tools and stored the equipment in a suitable location.	The candidate cleaned the work area and tools and stored the equipment in a suitable location and returned the work area to its pre-assessment state	
Q1	Q1 – Why is it important to ensure the tests are carried out at the specified oil temperature?	The candidate displayed an understanding of the need to test the system at a specified temperature.		
Q2	What could cause hydraulic flow to be below manufacture specification?	Apprentice gave basic explanation.	Apprentice gave detailed explanation	Apprentice gave comprehensive explanation
Q3	What controls the maximum pressure in a simple hydraulic circuit?	Apprentice gave explanation of how maximum pressure is controlled		
Q4	What steps should be taken to avoid contamination in a hydraulic circuit?	Basic explanation given on the steps required to avoid contamination	Detailed explanation given on the steps required to avoid contamination	Comprehensive explanation given on the steps required to avoid contamination

Assessment feedback form

Apprentice name

Apprentice number

IEPA name

Date of assessment

Task	Feedback

I confirm that this assessment has been completed to the required standard and meets the

Date of final assessment decision

Assessment grade

requirements for validity, currency, authenticity and sufficiency.

IEPA signature and date:

Assessment 700/750, 702/752, 704/754, 706/756, 708/758
Practical Observation

Task 2 - Hydraulic System Pressure and Flow tests

This task is for the following pathway:
Construction plant only

Task instructions for independent end-point assessors

Before starting the task the apprentice is required to provide a verbal risk assessment which will form part of the assessment.

Apprentices are required to;

- Carry out a hydraulic oil flow and pressure test
- Perform an adjustment to the hydraulic system main relief valve to set at manufacturer's specification
- Record the results and compare to the manufacturer's specifications.

The assessment ends when all equipment is packed away.

Apprentice to be provided with relevant machine prepared for the assessment task and having the hydraulic system main relief valve set below the manufacturers specifications.
The machine that is used for the assessment should be appropriate for the time allocated.

The centre will provide you and the apprentice with any site and task-specific requirements which will include a site risk assessment, manufacturer's reference data and test result recording form

If the engine is to be started the apprentice should check with the assessor first, who will check the machine is in a safe condition.

The model answers given to the questions are not exhaustive and any other correct answers may be accepted.

Time: 1 hour 45 minutes

Task is achieved at Pass/ Merit/ Distinction/ Fail

Task instructions for centres / end-point assessment customers

Before starting the task the apprentice is required to provide a verbal risk assessment which will form part of the assessment.

Apprentices are required to;

- Carry out a hydraulic oil flow and pressure test
- Perform an adjustment to the hydraulic system main relief valve to set at manufacturer's specification
- Record the results and compare to the manufacturer's specifications.

The assessment ends when all equipment is packed away.

You will need to provide the assessor and apprentice with any site and task specific requirements. A machine prepared to be used in assessment and access to the relevant manufacture service and technical reference information

<u>Machine condition:</u>

The machine should be parked with the implements **not** grounded and the parking brake applied. Covers can be removed to give access to pressure points if required. Adjust main relief valve pressure setting to below manufacturer's specification, this is to allow the apprentice to perform an adjustment.

Time: 1 hour 45 minutes

Task is achieved at Pass/ Merit/ Distinction/ Fail

Task instructions for apprentices

Before starting the task you are required to provide a verbal risk assessment which will form part of the assessment.

You are required to;

- Carry out a hydraulic oil flow and pressure test
- Perform an adjustment to the hydraulic system main relief valve to set at manufacturer's specification
- Record the results and compare to the manufacturer's specifications.

The assessment ends when all equipment is packed away.

The machine that is used for the assessment should be appropriate for the time allocated.

It is your responsibility to ensure that the machine is in a safe condition to work on and when the engine is to be run it is safe to do so. The apprentice is required to inform the assessor before starting the machine.

The assessment ends when all equipment is packed away.

Time: 1 hour 45 minutes

Task is achieved at Pass/ Merit/ Distinction/ Fail

Apprentice name:

Date:

Machine type for assessment:

Apprentices are **not** permitted to use the checklist to work from when completing the practical tasks.

All criteria must be achieved and the criteria indicated can be awarded marks based on the descriptors in the table.

Activity number and description	Mark awarded		
	1	**2**	**3**
1. Provide a verbal risk assessment for the task.			
2. Select and use the correct personal protective equipment.			
3. Identify the procedures and obtain manufacturer specification for the tests being conducted required to carry out the task.			
4. Select the correct equipment for the test, set up and use in an appropriate manner			
5. Carry out pressure and flow tests on the hydraulic circuit.			
6. Record findings and compare with Manufacturer's reference data.			
7. Set the hydraulic relief valve to manufacturer's recommendations.			
8. Restore work area and equipment is to pre-assessment state			
Q1 – Why is it important to ensure the tests are carried out at the specified oil temperature?			
Q2 - What could cause hydraulic flows to be below manufacture specification?			
Q3 – what controls the maximum pressure in a simple hydraulic circuit?			
Q4- what steps should be taken to avoid contamination in a hydraulic circuit?			
Total	/26		
Grade			
Apprentice signature and date			
Independent Assessor signature and date			

Converting marks to grades	
Grade	**Mark ranges**
Distinction	90% = 23
Merit =	75% = 20
Pass	65% = 17

The marks for each activity should be totalled and the conversion chart used to determine the grade for each task.

Practical observation descriptor table

Task 2 – Hydraulic System Pressure and Flow tests

		Grading descriptors		
Graded activity number and description from check list		**1 Mark**	**2 Marks**	**3 Marks**
1	Provide a verbal risk assessment for the task.	Apprentice showed a limited understanding of the risk assessment process and risks associated with task.	Apprentice showed a detailed understanding of the risk assessment process and risks associated with task.	Apprentice showed a comprehensive understanding of the risk assessment process and risks associated with task covering personal, environmental and bystander(s).
2	Select and use the correct personal protective equipment.	Apprentice selected and used appropriate PPE required for the task, according to the risk assessment/ site requirements.		
3	Identify the procedures that are required to carry out the task	Apprentice identified the correct procedures to carry out the task using the appropriate information		
4	Select the correct equipment, set up and use in an appropriate manner	Apprentice selected and used appropriate equipment required for the task, according to the manufacturer's procedures.	Apprentice selected and used appropriate equipment required for the task, according to the manufacturer's procedures. Equipment connected avoiding contamination to the system and taking precautions to contain fluid spill	Apprentice selected and used appropriate equipment required for the task, according to the manufacturer's procedures. Equipment connected avoiding contamination to the system and taking precautions to contain fluid spill. Apprentice showed awareness of the calibration of the equipment
5	Carry out pressure and flow tests on the hydraulic circuit.	Completed a basic pressure and flow test	Completed a detailed pressure and flow test following manufacturer's procedures	Checked the machine before starting the engine to conduct the test .Completed comprehensive pressure and flow test following manufacturer's procedures, recorded

				pressure deviation after comparison with manufacturer's specification and double checked test results
6	Record findings and compare with Manufacturer's reference data.	Apprentice recorded test data in an appropriate format but failed to provide detailed information on the machine being tested. Test results were not clearly recorded and compared against manufacturer specifications.	Apprentice recorded test data in an appropriate format providing detailed information on the machine being tested. Test results were clearly recorded and compared against manufacturer specifications.	Apprentice recorded test data in an appropriate format providing detailed information on the machine being tested. Test results were clearly recorded and compared against manufacturer specifications. Apprentice can identify if further actions are required.
7	Set the hydraulic relief valve to manufacturer's recommendations.	Apprentice carried out a basic reset of the hydraulic relief valve but did not fully follow manufacturer's procedures	Apprentice carried out a detailed reset of the hydraulic relief valve following manufacturer's procedures	
8	Restore machine, work area and equipment is to pre-assessment state.	The apprentice gave the equipment, machine and work area a basic clean and stored the equipment in a suitable location.	The apprentice cleaned equipment, machine and work area carefully on completion of test and stored it correctly. Checks were made to ensure it was ready for the next operational use. Machine was left safely parked with hydraulic implements in a safe stored position.	
Q1	Why is it important to ensure the tests are carried out at the specified oil temperature?	It is important to have the hydraulic oil at operating temperature because the viscosity of the oil is affected by temperature and can impact on internal leakage affecting flow and pressure readings.		
Q2	What could cause hydraulic flows to be below manufacture specification?	Apprentice gave basic explanation covering:	Apprentice gave detailed explanation covering:	Apprentice gave comprehensive explanation covering:

		Causes of low flow readings could be caused by: • Low engine RPM • Worn Hydraulic Pump • Internal/ external hydraulic leakage • Blocked suction filter • Incorrect oil • Incorrect hydraulic oil temperature during test Pump drive line	Causes of low flow readings could be caused by • Low engine RPM • Worn Hydraulic Pump • Internal/ external hydraulic leakage • Blocked suction filter • Incorrect oil • Incorrect hydraulic oil temperature during test Pump drive line	Causes of low flow readings could be caused by • Low engine RPM • Worn Hydraulic Pump • Internal/ external hydraulic leakage • Blocked suction filter • Incorrect oil • Incorrect hydraulic oil temperature during test Pump drive line
Q3	What controls the maximum pressure in a simple hydraulic circuit?	Maximum operating pressure in a simple hydraulic circuit is controlled by the main relief valve.		
Q4	What steps should be taken to avoid contamination in a hydraulic circuit?	Basic explanation covering: • Checking cleanliness of containers, working environment and machine • Clean around oil filler cap • Plug hydraulic lines on removal • Correct storage of oils • Avoid cross contamination from other equipment Regular maintenance	Detailed explanation covering: • Checking cleanliness of containers, working environment and machine • Clean around oil filler cap • Plug hydraulic lines on removal • Correct storage of oils • Avoid cross contamination from other equipment Regular maintenance	Comprehensive explanation covering: • Checking cleanliness of containers, working environment and machine • Clean around oil filler cap • Plug hydraulic lines on removal • Correct storage of oils • Avoid cross contamination from other equipment Regular maintenance

Assessment feedback form

Apprentice name

Apprentice number

IEPA name

Date of assessment

Task	Feedback

I confirm that this assessment has been completed to the required standard and meets the

Date of final assessment decision

Assessment grade

requirements for validity, currency, authenticity and sufficiency.

IEPA signature and date:

Assessment 700/750, 702/752, 704/754, 706/756, 708/758
Practical Observation

Task 3 – Machine appraisal

Task instructions for independent end-point assessors

Before starting the task the apprentice is required to provide a verbal risk assessment which will form part of the assessment.

The apprentice is required to carry out an appraisal on a machine, identify any defaults with the machine and write a report on the condition of the machine

The assessment ends when all the equipment is packed away

The centre will provide a manufacturer's checklist and manufacturer's technical documentation or other suitable checklist, eg BAGMA vehicle or machine checklist. The centre will also provide documentation to enable the apprentice to write a report on the condition of the machine.

The machine that is used for the assessment should be appropriate for the time allocated. The assessor is to instruct the apprentice on the depth and breadth of the appraisal depending on the complexity of the machine chosen.

The centre will provide the assessor and the apprentice with any site and task specific requirements including a risk assessment.

The models answers given for oral questions are not an exhaustive list, if applicable other suitable answers may be accepted.

Time for assessment: 1 hour 45 minutes.

Task is achieved at Pass/ Merit/ Distinction/ Fail

Task instructions for centres / end-point assessment customers

Before starting the task the apprentice is required to provide a verbal risk assessment which will form part of the assessment.

The apprentice is required to carry out an appraisal on a machine, identify any defaults with the machine and write a report on the condition of the machine

The assessment ends when all the equipment is packed away

You will provide a manufacturer's checklist and manufacturer's technical documentation or other suitable checklist, eg BAGMA vehicle or machine checklist to the assessor and apprentice. You will also provide documentation to enable the apprentice to write a report on the condition of the machine.

The machine that is used for the assessment should be appropriate for the time allocated. The assessor is to instruct the apprentice on the depth and breadth of the appraisal depending on the complexity of the machine chosen.

You will provide the assessor and the apprentice with any site and task specific requirements including a risk assessment.

Time for assessment: 1 hour 45 minutes.

Task is achieved at Pass/ Merit/ Distinction/ Fail

Task instructions for apprentices

Before starting the task the apprentice is required to provide a verbal risk assessment which will form part of the assessment.

You are required to carry out an appraisal on a machine, identify any defaults with the machine and write a report on the condition of the machine

The assessment ends when all the equipment is packed away

The centre will provide a manufacturer's checklist and manufacturer's technical documentation or other suitable checklist, eg BAGMA vehicle or machine checklist. The centre will also provide documentation to enable the apprentice to write a report on the condition of the machine.

The machine that is used for the assessment should be appropriate for the time allocated.

The assessor will instruct you on the depth and breadth of the appraisal depending on the complexity of the machine chosen.

The centre will provide the apprentice with any site and task specific requirements including a risk assessment.

Time for assessment: 1 hour 45 minutes.

Task is achieved at Pass/ Merit/ Distinction/ Fail

Apprentice name:

Date:
Machine type for assessment:

Apprentices are **not** permitted to use the checklist to work from when completing the practical tasks.

All criteria must be achieved and the criteria indicated can be awarded marks based on the descriptors in the table.

Activity number and description	Mark awarded		
	1	**2**	**3**
1. Provide a verbal risk assessment for the task.			
2. Select and use the correct personal protective equipment.			
3. Identify the procedures that are required to carry out the task			
4. Select the correct equipment for the task, set up and use in an appropriate manner			
5. Carry out the appraisal of the machine and complete check list			
6. Write a report on findings			
7. Carry out a walk round of the machine explaining how the appraisal was carried out			
8. Restore machine, work area and equipment to its per-assessment state			
Q1 – What recommendation would you give if a Safety Guard was damaged or missing?			
Q2 - Why is it important to carry out an accurate appraisal of a machine			
Total	/23		
Grade			
Apprentice signature and date			
Independent Assessor signature and date			

Converting marks to grades	
Grade	**Mark ranges**
Distinction	90% = 21
Merit =	75% = 17
Pass	65% = 15

The marks for each activity should be totalled and the conversion chart used to determine the grade for each task.

Practical observation descriptor table

Task 3– Machine Appraisal

		Grading descriptors		
Graded activity number and description from check list		**1 Mark**	**2 Marks**	**3 Marks**
1	Provide a verbal risk assessment for the task.	Apprentice showed a limited understanding of the risk assessment process and risks associated with task.	Apprentice showed a detailed understanding of the risk assessment process and risks associated with task.	Apprentice showed a comprehensive understanding of the risk assessment process and risks associated with task covering personal, environmental and bystander(s).
2	Select and use the correct personal protective equipment.	Apprentice selected and used appropriate PPE required for the task, according to the risk assessment/ site requirements.		
3	Identify the procedures that are required to carry out the task	Apprentice identified the correct procedures to carry out the task using the appropriate information		
4	Select the correct equipment for the task, set up and use in an appropriate manner	Apprentice selected and used appropriate equipment required for the task, according to the manufacturer's procedures.		
5	Carry out the appraisal of the machine and complete check list	The apprentice completed a basic check list showing the major defects with the machine	The apprentice completed a detailed check list showing all the defects on the machine	The apprentice completed a comprehensive check list explaining all the defects on the machine in detail and why these were considered defects
6	Write a report on findings	The apprentice wrote a basic report on the findings	The apprentice wrote a detailed report on the findings and was able to suggest actions that needed to be taken	The apprentice wrote a comprehensive report on the findings, was able to suggest the actions that needed to be taken

				and demonstrated why.
7	Carry out a walk round of the machine explaining how the appraisal was carried out	The apprentice gave a basic explanation of how the appraisal was conducted and the findings explained	The apprentice gave a detailed explanation of how the appraisal was carried out, explained the findings and why these were faults	The apprentice gave a comprehensive explanation of how the appraisal was carried out, explained the findings and explained the reasons to what was found and what was in the report. The apprentice was able to talk about corrective action
8	Restore machine, work area and equipment to its pre-assessment state	The Apprentice cleaned the work area and tools and stored the equipment in a suitable location.	The Apprentice cleaned the work area and tools and stored the equipment in a suitable location and returned the machine and work area to its pre-assessment state	
Q1	What recommendations and actions would you take if a safety guard was damaged or missing?	Apprentice gave a basic recommendation covering: • To make sure the equipment is safe to use and up to current legislation. • To also make sure the equipment is up to safe working condition. • Isolate machine so it cannot be used until repaired. • Notify supervisor\ manager.	Apprentice gave a detailed recommendation covering: • To make sure the equipment is safe to use and up to current legislation. • To also make sure the equipment is up to safe working condition. • Isolate machine so it cannot be used until repaired.	Apprentice gave a comprehensive recommendation covering: • To make sure the equipment is safe to use and up to current legislation. • To also make sure the equipment is up to safe working condition. • Isolate machine so it cannot be used until repaired.

			• Notify supervisor \ manager.	• Notify supervisor \ manager.
Q2	What is it important to carry out an accurate appraisal of a machine?	Basic answer covers the need for a customer /company to know the costs	Detailed answer covers the need to understand the cost to repair the machine and to put right defects that are not obvious to the customer and prevent failure of the machine when at work	Comprehensive answer covers to understand the cost to put the machine in good working order. Can identify good customer service and limit possibility of breakdowns. Can also discuss legal implications of machines being fit for purpose.

Assessment feedback form

Apprentice name

Apprentice number

IEPA name

Date of assessment

Task	Feedback

I confirm that this assessment has been completed to the required standard and meets the

Date of final assessment decision

Assessment grade

requirements for validity, currency, authenticity and sufficiency.

IEPA signature and date:

Assessment 700/750, 702/752, 704/754, 706/756, 708/758
Practical Observation

Task 4 - Preparation and pre-delivery inspection (PDI)

This task is for the following pathways:
Agriculture
Forestry and arboriculture
Ground care
Fixed plant

Task instructions for independent end-point assessors

Before starting the task the apprentice is required to provide a verbal risk assessment which will form part of the assessment.

The Apprentice is required to:

- Carry out a PDI (Pre-delivery Inspection) on a piece of machinery in preparation for the Handover of a machine
- The PDI must be completed with the manufacturers check sheet or equivalent.
- Conduct a walk round of the machine explaining how this process was done and discuss findings with the assessor.

The machine that is used for the assessment should be appropriate for the time allocated.

The machine may be run if this is required but the apprentice must check with the assessor before any machine is started. It is expected that minor adjustments may need to be made to the machine but any further adjustments should be noted on the check sheet and discussed with the assessor during the walk around. The apprentice is not expected to polish the machine but is expected to clean any areas that have worked on.

The apprentice is not required to road test any piece of machinery.

Apprentice to be provided with relevant machine to their sector, relevant manufacturer's information and manufacturers PDI check sheet or equivalent by centre.

The centre will provide the assessor and the apprentice with any site and task specific requirements including a risk assessment.

The models answers given for oral questions are not an exhaustive list; if applicable other suitable answers may be accepted.

Time for assessment: 1 hour 45 minutes.

Task is achieved at Pass/ Merit/ Distinction/ Fail

Task instructions for centres / end-point assessment customers

This task is for the following pathways:
Agriculture
Forestry and arboriculture
Ground care
Fixed plant

Before starting the task the apprentice is required to provide a verbal risk assessment which will form part of the assessment.

The Apprentice is required to

- Carry out a PDI (Pre-delivery Inspection) on a piece of machinery in preparation for Handover of a machine
- The PDI must be completed with the manufacturers check sheet or equivalent.
- Conduct a walk round of the machine explaining how this process was done and discuss findings with the assessor.

The machine that is used for the assessment should be appropriate for the time allocated.

The machine may be run if this is required but the apprentice must check with the assessor before any machine is started. It is expected that minor adjustments may need to be made to the machine but any further adjustments should be noted on the check sheet and discussed with the assessor during the walk around. The apprentice is not expected to polish the machine but is expected to clean any areas that have worked on.

The Apprentice is not required to road test any piece of machinery.

Apprentice to be provided with relevant machine to their sector, relevant manufacturers Information and manufacturers PDI check sheet or equivalent by centre.

You will provide the assessor and the apprentice with any site and task specific requirements including a risk assessment.

Time for assessment: 1 hour 45 minutes.

Task is achieved at Pass/ Merit/ Distinction/ Fail

Task instructions for apprentices

This task is for the following pathways:

Agriculture

Forestry and arboriculture

Ground care

Fixed plant

Before starting the task, you are required to provide a verbal risk assessment which will form part of the assessment.

The Apprentice is required to:

- Carry out a PDI (Pre-delivery Inspection) on a piece of machinery in preparation for Handover of a machine
- The PDI must be completed with the manufacturers check sheet or equivalent.
- Conduct a walk round of the machine explaining how this process was done and discuss findings with the assessor.

The machine that is used for the assessment should be appropriate for the time allocated.

The machine may be run if this is required but the apprentice must check with the assessor before any machine is started. It is expected that minor adjustments may need to be made to the machine but any further adjustments should be noted on the check sheet and discussed with the assessor during the walk around. The apprentice is not expected to polish the machine but is expected to clean any areas that have worked on.

You are not required to road test any piece of machinery.

You will be provided with relevant machine to their sector, relevant manufacturer's information and manufacturers PDI check sheet or equivalent by centre.

The centre will provide you with any site and task specific requirements including a risk assessment.

Time for assessment: 1 hour 45 minutes.

Task is achieved at Pass/ Merit/ Distinction/ Fail

Apprentice name:

Date:
Machine type for assessment:

Apprentices are **not** permitted to use the checklist to work from when completing the practical tasks.

All criteria must be achieved and the criteria indicated can be awarded marks based on the descriptors in the table.

Activity number and description	Mark awarded		
	1	**2**	**3**
1. Provide a verbal risk assessment for the task.			
2. Select and use the correct personal protective equipment.			
3. Identify the procedures that are required to carry out the task			
4. Select the correct equipment for the task use in an appropriate manner			
5. Carry out the PDI of the machine			
6. Complete PDI Check sheet and record findings			
7. Conduct walk round of machine and discuss findings			
8. Restore work area and equipment to its pre-assessment state			
Q1 What is the reason for a PDI?			
Q2 What are the potential consequences of a machine failing that has not had a PDI done			
Total	/24		
Grade			
Apprentice signature and date			
Independent Assessor signature and date			

Converting marks to grades	
Grade	**Mark ranges**
Distinction	90% = 22
Merit =	75% = 18
Pass	65% = 16

The marks for each activity should be totalled and the conversion chart used to determine the grade for each task.

Practical observation descriptor table

Task 4 –Pre-delivery inspection (PDI)

		Grading descriptors		
Graded activity number and description from check list		**1 Mark**	**2 Marks**	**3 Marks**
1	Provide a verbal risk assessment for the task	Apprentice showed a basic understanding of the risk assessment process and risks associated with task.	The apprentice showed a detailed understanding of the risk assessment process and the risks associated with the task.	The apprentice showed a comprehensive understanding of the risk assessment process and the risks associated with the task covering personal, environmental and bystander(s).
2	Select and use the correct personal protective equipment.	Apprentice selected and used appropriate PPE required for the task, according to the risk assessment/ site requirements.		
3	Identify the procedures that are required to carry out the task	Apprentice identified the correct procedures to carry out the task using the appropriate information		
4	Select the correct equipment for the task, use in an appropriate manner	Apprentice selected and used appropriate equipment required for the task, according to the manufacturer's procedures.	Apprentice selected the correct tools and equipment required for the task, according to the manufacturer's procedures and applied them in an appropriate manner.	
5	Carry out the PDI of the machine	The basic PDI checks of the machine were carried out and any adjustments made to a basic standard	A detailed PDI check was carried out of the machine with all the minor adjustments made accurately. Areas that had been	The PDI was carried out to a comprehensive standard with all checks carried out in a logical and methodical order allowing the

			worked on were cleaned.	task to be completed in a timely manner. All minor adjustments were made accurately with further actions being required noted on the check sheet Any areas worked on were cleaned to a high standard.
6	Complete PDI Check sheet and record findings	The basic checks had been identified on the check sheet and the findings were to a basic standard	The check sheet was completed to a detailed standard and the findings were detailed with clear and concise comments	The check sheet was completed comprehensively with the check sheet completed to a high standard identifying all findings clearly identifying any further action required
7	Conduct walk round of machine and discuss findings	The apprentice was able to discuss the task and adjustments made to a basic standard referring to the check sheet	The apprentice was able to give a detailed explanation of the PDI, what was found, what was adjusted and refer this back to the check sheet highlighting any further action required	The apprentice was able to comprehensively discuss the PDI process, what the findings were, what was adjusted, and why and what still required to be done. The description of this was done in a methodical way and the apprentice was able to refer the discussion back to his check sheet and gave a comprehensive description to any further actions or work that was required.
8	Restore work area and equipment to its pre-assessment state	The apprentice cleaned the work area and tools and stored the equipment in a suitable location.	The apprentice cleaned the work area and tools and stored the equipment in a suitable location and returned the work area to its pre-assessment state	

Q1	Q1. What is the reason for a PDI?	The apprentice gave a basic explanation for the reasons for a PDI. Answers- 1. To make sure equipment is safe to use and is up to current legislation. 2.To make sure the equipment is to the specification ordered by the customer. 3. Ensure the machine is ready for work 4.Ensure the integrity of the machine 5. Identify any faults with assembly 6. Any reasonable answer.	The apprentice gave a detailed explanation for the reasons for a PDI. Answers- 1. To make sure equipment is safe to use and is up to current legislation. 2.To make sure the equipment is to the specification ordered by the customer. 3. Ensure the machine is ready for work 4.Ensure the integrity of the machine 5. Identify any faults with assembly 6. Any reasonable answer.	The apprentice gave a comprehensive explanation for the reasons for a PDI. Answers- 1. To make sure equipment is safe to use and is up to current legislation. 2.To make sure the equipment is to the specification ordered by the customer. 3. Ensure the machine is ready for work 4.Ensure the integrity of the machine 5. Identify any faults with assembly 6. Any reasonable answer.
Q2	Q2. What are the potential consequences of a machine failing that has not had a PDI done?	The apprentice gave a basic explanation of the consequences of a new machine failing. Answers- 1. Customer unhappy and disappointed with the product and the company who supplied the equipment. 2. The customer would be less likely to purchase from the same company again.	The apprentice gave a detailed explanation of the consequences of a new machine failing. Answers- 1. Customer unhappy and disappointed with the product and the company who supplied the equipment. 2. The customer would be less likely to purchase from the same	The apprentice gave a comprehensive explanation of the consequences of a new machine failing. Answers- 1. Customer unhappy and disappointed with the product and the company who supplied the equipment. 2. The customer would be less likely to purchase from the same company again.

		3. Health and safety/ litigation. Any other suitable answer.	company again. 3. Health and safety/ litigation. Any other suitable answer.	3. Health and safety/ litigation. Any other suitable answer.

Assessment feedback form

Apprentice name

Apprentice number

IEPA name

Date of assessment

Task	Feedback

I confirm that this assessment has been completed to the required standard and meets the

Date of final assessment decision

Assessment grade

requirements for validity, currency, authenticity and sufficiency.

IEPA signature and date:

Assessment 700/750, 702/752, 704/754, 706/756, 708/758
Practical Observation

Task 5 - Carry out a Pre-hire Inspection

This task is for the following pathway:

Construction and Plant

Task instructions for independent end-point assessors

Before starting the task the apprentice is required to provide a verbal risk assessment which will form part of the assessment.

The Apprentice is required to

- Carry out a Pre-hire Inspection) on a piece of machinery in preparation for the Handover of a machine
- The Pre-hire Inspection must be completed with the manufacturers check sheet or equivalent.
- Conduct a walk round of the machine explaining how this process was done and discuss findings with the assessor.

The machine that is used for the assessment should be appropriate for the time allocated.

The machine may be run if this is required but the apprentice must check with the assessor before any machine is started. It is expected that minor adjustments may need to be made to the machine but any further adjustments should be noted on the check sheet and discussed with the assessor during the walk around. The apprentice is not expected to polish the machine but is expected to clean any areas that have worked on.

The apprentice is not required to road test any piece of machinery.

Apprentice to be provided with relevant machine to their sector, relevant manufacturer's information and manufacturers/organisation Pre-hire Inspection check sheet or equivalent by centre.

The centre will provide the assessor and the apprentice with any site and task specific requirements including a risk assessment.

The models answers given for oral questions are not an exhaustive list; if applicable other suitable answers may be accepted.

Time for assessment: 1 hour 45 minutes.

Task is achieved at Pass/ Merit/ Distinction/ Fail

Task instructions for centres / end-point assessment customers

Before starting the task the apprentice is required to provide a verbal risk assessment which will form part of the assessment.

The Apprentice is required to

- Carry out a Pre-hire Inspection on a piece of machinery in preparation for Handover of a machine
- The Pre-hire Inspection must be completed with the manufacturers check sheet or equivalent.
- Conduct a walk round of the machine explaining how this process was done and discuss findings with the assessor.

The machine that is used for the assessment should be appropriate for the time allocated.

The machine may be run if this is required but the apprentice must check with the assessor before any machine is started. It is expected that minor adjustments may need to be made to the machine but any further adjustments should be noted on the check sheet and discussed with the assessor during the walk around. The apprentice is not expected to polish the machine but is expected to clean any areas that have worked on.

The Apprentice is not required to road test any piece of machinery.

Apprentice to be provided with relevant machine to their sector, relevant manufacturers Information and manufacturers / organisation Pre-hire inspection check sheet or equivalent by centre.

You will provide the assessor and the apprentice with any site and task specific requirements including a risk assessment.

Time for assessment: 1 hour 45 minutes.

Task is achieved at Pass/ Merit/ Distinction/ Fail

Task instructions for apprentices

Before starting the task you are required to provide a verbal risk assessment which will form part of the assessment.

You are required to

- Carry out a Pre-hire Inspection on a piece of machinery in preparation for Handover of a machine
- The Pre-hire Inspection must be completed with the manufacturers check sheet or equivalent.
- Conduct a walk round of the machine explaining how this process was done and discuss findings with the assessor.

The machine that is used for the assessment should be appropriate for the time allocated.

The machine may be run if this is required but the apprentice must check with the assessor before any machine is started. It is expected that minor adjustments may need to be made to the machine but any further adjustments should be noted on the check sheet and discussed with the assessor during the walk around. The apprentice is not expected to polish the machine but is expected to clean any areas that have worked on.

You are not required to road test any piece of machinery.

You will be provided with relevant machine to their sector, relevant manufacturer's information and manufacturers/organisations Pre-hire Inspection check sheet or equivalent by centre.

The centre will provide you with any site and task specific requirements including a risk assessment.

Time for assessment: 1 hour 45 minutes.

Task is achieved at Pass/ Merit/ Distinction/ Fail

Apprentice name:

Date:

Machine type for assessment:

Apprentices are **not** permitted to use the checklist to work from when completing the practical tasks, but may familiarise themselves with it prior to the observation.

All criteria must be achieved and the criteria indicated can be awarded marks based on the descriptors in the table.

Activity number and description	Mark awarded		
	1	**2**	**3**
1. Provide a verbal risk assessment for the task.			
2. Select and use the correct personal protective equipment.			
3. Identify the procedures that are required to carry out the task			
4. Select the correct equipment for the task use in an appropriate manner			
5. Carry out the Pre-hire Inspection of the machine			
6. Complete Pre-hire Inspection check sheet and record findings			
7. Conduct walk round of machine and discuss findings			
8. Restore work area and equipment to its pre-assessment state			
Q1 What is the reason for a Pre-hire Inspection?			
Q2 What are the potential consequences of a machine failing that has not had a Pre-hire Inspection done			
Total	/24		
Grade			
Apprentice signature and date			
Independent Assessor signature and date			

Converting marks to grades	
Grade	**Mark ranges**
Distinction	90% = 22
Merit =	75% = 18
Pass	65% = 16

The marks for each activity should be totalled and the conversion chart used to determine the grade for each task.

Practical observation descriptor table

Task 5 –Carry out a Pre-hire Inspection

		Grading descriptors		
Graded activity number and description from check list		**1 Mark**	**2 Marks**	**3 Marks**
1	Provide a verbal risk assessment for the task	Apprentice showed a basic understanding of the risk assessment process and risks associated with task.	The apprentice showed a detailed understanding of the risk assessment process and the risks associated with the task.	The apprentice showed a comprehensive understanding of the risk assessment process and the risks associated with the task covering personal, environmental and bystander(s).
2	Select and use the correct personal protective equipment.	Apprentice selected and used appropriate PPE required for the task, according to the risk assessment/ site requirements.		
3	Identify the procedures that are required to carry out the task	Apprentice identified the correct procedures to carry out the task using the appropriate information		
4	Select the correct equipment for the task, use in an appropriate manner	Apprentice selected and used appropriate equipment required for the task, according to the manufacturer's /organisations procedures.	Apprentice selected the correct tools and equipment required for the task, according to the manufacturer's /organisations procedures and applied them in an appropriate manner.	
5	Carry out the Pre-hire Inspection of the machine	The basic Pre-hire Inspection checks of the machine were carried out and any adjustments made to a basic standard	A detailed Pre-hire Inspection check was carried out of the machine with all the minor adjustments made accurately. Areas	The Pre-hire Inspection was carried out to a comprehensive standard with all checks carried out in a logical and methodical

			that had been worked on were cleaned.	order allowing the task to be completed in a timely manner. All minor adjustments were made accurately with further actions being required noted on the check sheet Any areas worked on were cleaned to a high standard.
6	Complete Pre-hire Inspection check sheet and record findings	The basic checks had been identified on the check sheet and the findings were to a basic standard	The check sheet was completed to a detailed standard and the findings were detailed with clear and concise comments	The check sheet was completed comprehensively with the check sheet completed to a high standard identifying all findings clearly identifying any further action required
7	Conduct walk round of machine and discuss findings	The apprentice was able to discuss the task and adjustments made to a basic standard referring to the check sheet	The apprentice was able to give a detailed explanation of the Pre-hire Inspection, what was found, what was adjusted and refer this back to the check sheet highlighting any further action required	The apprentice was able to comprehensively discuss the Pre-hire Inspection process, what the findings were, what was adjusted, and why and what still required to be done. The description of this was done in a methodical way and the apprentice was able to refer the discussion back to his check sheet and gave a comprehensive description to any further actions or work that was required.
8	Restore work area and equipment to its pre-assessment state	The apprentice cleaned the work area and tools and stored the equipment in a suitable location.	The apprentice cleaned the work area and tools and stored the equipment in a suitable location and returned the work	

			area to its pre-assessment state	
Q1	Q1. What is the reason for a Pre-hire Inspection?	The apprentice gave a basic explanation for the reasons for a Pre-hire Inspection. Answers- 1. To make sure equipment is safe to use and is up to current legislation. 2. To make sure the equipment is to the specification ordered by the customer. 3. Ensure the machine is ready for work 4.Ensure the integrity of the machine 5. Identify any faults with assembly 6. Any other reasonable answer.	The apprentice gave a detailed explanation for the reasons for a Pre-hire Inspection. Answers- 1. To make sure equipment is safe to use and is up to current legislation. 2. To make sure the equipment is to the specification ordered by the customer. 3. Ensure the machine is ready for work 4.Ensure the integrity of the machine 5. Identify any faults with assembly 6. Any other reasonable answer.	The apprentice gave a comprehensive explanation for the reasons for a Pre-hire Inspection. Answers- 1. To make sure equipment is safe to use and is up to current legislation. 2. To make sure the equipment is to the specification ordered by the customer. 3. Ensure the machine is ready for work 4.Ensure the integrity of the machine 5. Identify any faults with assembly 6. Any other reasonable answer.
Q2	Q2. What are the potential consequences of a machine failing that has not had a Pre-hire Inspection done	The apprentice gave a basic explanation of the consequences of a new machine failing. Answers- 1. Customer unhappy and disappointed with the product and the company who supplied the equipment. 2. The customer would be less likely to purchase from	The apprentice gave a detailed explanation of the consequences of a new machine failing. Answers- 1. Customer unhappy and disappointed with the product and the company who supplied the equipment. 2. The customer would be	The apprentice gave a comprehensive explanation of the consequences of a new machine failing. Answers- 1. Customer unhappy and disappointed with the product and the company who supplied the equipment. 2. The customer would be less likely to

		the same company again. 3. Health and safety/ litigation. Any other suitable answer.	less likely to purchase from the same company again. 3. Health and safety/ litigation. Any other suitable answer.	purchase from the same company again. 3. Health and safety/ litigation. Any other suitable answer.

Assessment feedback form

Apprentice name

Apprentice number

IEPA name

Date of assessment

Task	Feedback

I confirm that this assessment has been completed to the required standard and meets the

Date of final assessment decision

Assessment grade

requirements for validity, currency, authenticity and sufficiency.

IEPA signature and date:

Assessment 700/750, 702/752, 704/754, 706/756, 708/758
Practical Observation

Task 6 - Remove, replace and tension a belt

Task instructions for independent end-point assessors

Before starting the task the apprentice is required to provide a verbal risk assessment which will form part of the assessment.

Apprentices are required to;

- Remove a belt(s) from a drive mechanism and inspect drive components before refitting the belt and adjusting to manufacturer specifications / requirements.
- Produce a written report on their findings

Apprentice to be provided with relevant machine, test specifications and test report form by centre.

The machine that is used for the assessment should be appropriate for the time allocated.

The centre will provide you and the apprentice with any site and task specific requirements including a risk assessment.

The model answers given to the questions are not exhaustive and any other correct answers may be accepted.

Time: 1 hour 45 minutes

This task is achieved at Pass, Merit and Distinction.

Task instructions for centres / end-point assessment customers

Before starting the task the apprentice is required to provide a verbal risk assessment which will form part of the assessment.

Apprentices are required to;

- Remove a belt(s) from a drive mechanism and inspect the drive components before refitting the belt and adjusting to manufacturer specifications / requirements.
- Produce a written report on their findings

You are required to supply a range of belt driven mechanisms. The machine that is used for the assessment should be appropriate for the time allocated.

The assessment ends when all equipment is packed away.

You will provide the assessor and the apprentice with any site and task specific requirements including a risk assessment.

Time: 1 hour 45 minutes

This task is achieved at Pass, Merit and Distinction.

Task instructions for apprentices

Before starting the task the you are required to provide a verbal risk assessment which will form part of the assessment.

You are required to:

- Remove a belt(s) from a drive mechanism and inspect the drive components before refitting the belt and adjusting to manufacturer specifications / requirements.
- Produce a written report on their findings

The assessment ends when all equipment is packed away.

Apprentice to be provided with relevant machine, test specifications and test result recording form by centre.

The machine that is used for the assessment should be appropriate for the time allocated.

The centre will provide the apprentice and assessor with any site and task specific requirements

Time: 1 hour 45 minutes

This task is achieved at Pass, Merit and Distinction.

Apprentice name:

Date:

Apprentices are **not** permitted to use the checklist to work from when completing the practical tasks.

All criteria must be achieved and the criteria indicated can be awarded marks based on the descriptors in the table.

Activity number and description	Mark awarded		
	1	**2**	**3**
1. Provide a verbal risk assessment for the task.			
2. Select and use appropriate personal protective equipment			
3. Identify the procedures and data required to complete the task			
4. Select the correct equipment for the test and use in an appropriate manner			
5. Undertake removal of the drive belt(s) inspect the belt drive components and refit.			
6. Produce a written report on the findings			
7. Restore machine, work area and equipment to its per-assessment state			
Q1 – Explain the step by step process for removing belt from a machine?			
Q2 – What could cause a belt to slip?			
Q3 – What advantages do automatic belt tensioners give?			
Q4 – How would you make the machine safe before working on the belt mechanism?			
Total	/25		
Grade			
Apprentice signature and date			
Independent Assessor signature and date			

Converting marks to grades	
Grade	**Mark ranges**
Distinction	90% = 23
MErit	75% = 19
Pass	60% = 16

The marks for each activity should be totalled and the conversion chart used to determine the grade for each task.

Practical observation descriptor table

Task 6 – Remove, replace and tension a belt

		Grading descriptors		
Graded activity number and description from check list		**1 Mark**	**2 Marks**	**3 Marks**
1	Provide a verbal risk assessment for the task.	The apprentice showed a limited understanding of the risk assessment process.	The apprentice showed a detailed understanding of the risk assessment process.	The apprentice showed comprehensive understanding of the risk assessment process.
2	Select and use the correct personal protective equipment.	Apprentice selected and used appropriate PPE required for the task, according to the risk assessment/ site requirements.		
3	Identify the procedures that are required to carry out the task	Apprentice identified the correct procedures to carry out the task using the appropriate information		
4	Select the correct equipment and use in an appropriate manner	Apprentice selected the appropriate tools and equipment required for the task, according to the manufacturer's procedures.	Apprentice selected the correct tools and equipment required for the task, according to the manufacturer's procedures and applied them in an appropriate manner.	
5	Undertake removal of the drive belt(s) inspect the belt drive components and refit.	The apprentice worked to a basic standard but met the procedures requirements. Good manual handling techniques used.	The apprentice worked to a detailed standard followed the procedure to each point and met the criteria, completing the task methodically and all the appropriate parts removed and checked and refitted	The apprentice worked to a comprehensive standard followed the procedure to each point and met the criteria, completing the task methodically and all the appropriate parts removed and

				thoroughly checked and confirmed as serviceable. Settings checked and re-checked
6	Produce a written report on the findings	Apprentice recorded basic details of work undertaken and reported limited information on findings	Apprentice recorded detailed information of the work undertaken and the findings. Comparisons made against manufacturer's data and a serviceability conclusion reached	Apprentice recorded comprehensive information in an appropriate format and reached a serviceability conclusion providing evidence of comparison with manufacturer's reference data.
7	Restore machine, work area and equipment to its per-assessment state	The candidate cleaned the work area and tools and stored the equipment in a suitable location.	The candidate cleaned the work area and tools and stored the equipment in a suitable location and returned the work area to its pre-assessment state	
Q1	Explain the step by step process for removing a drive belt from a machine?	The candidate gave a basic answer which could cover : • Isolate machine from power source • Ensure drive components cannot rotate accidentally • Slacken tension from belt • Note the belt drive direct • Note the routing of the drive belt around multiple pulleys • Remove belt	The candidate gave a detailed answer which could cover: • Isolate machine from power source • Ensure drive components cannot rotate accidentally • Slacken tension from belt • Note the belt drive direct • Note the routing of the drive belt around multiple pulleys • Remove belt	The candidate gave a comprehensive answer and could explain the reasons for each action: • Isolate machine from power source • Ensure drive components cannot rotate accidentally • Slacken tension from belt • Note the belt drive direct • Note the routing of the drive belt around multiple pulleys • Remove belt

Q2	What causes belt slippage?	The candidate gave a basic answer which could include: • Oil contamination • Grease contamination • Under tensioning • Overload • Worn drive pulleys • Wrong cross-section belt fitted • Matched set of belts not used	The candidate gave a detailed answer which could include: • Oil contamination • Grease contamination • Under tensioning • Overload • Worn drive pulleys • Wrong cross-section belt fitted • Matched set of belts not used	The candidate gave a comprehensive answer and could explain why each set of circumstances caused the slippage, covering: • Oil contamination • Grease contamination • Under tensioning • Overload • Worn drive pulleys • Wrong cross-section belt fitted • Matched set of belts not used
Q3	What advantages do automatic tensioners have?	The candidate gave a basic answer. Answer include: • They ensure correct belt tension • They promote longer belt life • Lessen the risk of belt noise • They reduce the risk of bearing failure because the belt cannot be overtightened	The candidate gave a detailed answer and could explained why the automatic tensioner gave the advantage. Answer include: • They ensure correct belt tension • They promote longer belt life • Lessen the risk of belt noise • They reduce the risk of bearing failure because the belt cannot be overtightened	
Q4	How would you make the machine safe before working on the belt mechanism?	The apprentice gave a basic answer.	The apprentice displayed a competent knowledge of how to safeguard against	

		Answer include: • Disconnect the drive to the belt • Stop engine • Isolate electrics • Chock the machine to stop it rotating	accident, personal injury and damage to the machine. Answer include: • Disconnect the drive to the belt • Stop engine • Isolate electrics • Chock the machine to stop it rotating	

Assessment feedback form

Apprentice name

Apprentice number

IEPA name

Date of assessment

Task	Feedback

I confirm that this assessment has been completed to the required standard and meets the

Date of final assessment decision

Assessment grade

requirements for validity, currency, authenticity and sufficiency.

IEPA signature and date:

Assessment 700/750, 702/752, 704/754, 706/756, 708/758
Practical Observation

Task 7 - Remove replace and adjust a roller chain

Task instructions for independent end-point assessors

Before starting the task the apprentice is required to provide a verbal risk assessment which will form part of the assessment

Apprentices are required to;

- Remove a chain from a drive mechanism and inspect the drive components before refitting the chain and adjusting to manufacturer specifications / requirements.
- Produce a written report on their findings

Apprentice to be provided with relevant machine and test specifications by the centre.

The chain drive mechanism supplied is left to the centres discretion and could be an elevator chain, a roller chain, duplex chain or triplex

-

The machine that is used for the assessment should be appropriate for the time allocated.

-

The centre will provide you and the apprentice with any site and task specific requirements including a risk assessment.

The apprentice will be given access to the relevant manufacturer's reference documentation together with a reporting sheet

The model answers given to the questions are not exhaustive and any other correct answers may be accepted.

Time: 1 hour 45 minutes

Task is achieved at Pass/ Merit/ Distinction/ Fail

Task instructions for centres / end-point assessment customers

Before starting the task the apprentice is required to provide a verbal risk assessment which will form part of the assessment

Apprentices are required to;

- Remove a chain from a drive mechanism and inspect the drive components before refitting the chain and adjusting to manufacturer specifications / requirements.
- Produce a written report on their findings

You are required to supply a range of mechanisms or machines employing a chain drive. The chain drive mechanism supplied is left to the centres discretion and could be an elevator chain, a roller chain, duplex chain or triplex chain or any other chain type relevant to the apprentices sector of the industry, chainsaw chains are excluded

The machine or mechanism used for the assessment should be appropriate for the time allocated and if considered necessary be prepared to allow access to the chain drive mechanism.

The assessment ends when all equipment is packed away.

You will provide the assessor and the apprentice with any site and task specific requirements including a risk assessment. Also, the relevant manufacturer's reference documentation together with a reporting sheet

Time: 1 hour 45 minutes

Task is achieved at Pass/ Merit/ Distinction/ Fail

Task instructions for apprentices

Before starting the task you are required to provide a verbal risk assessment which will form part of the assessment

You are required to:

- Remove a chain from a drive mechanism and inspect the drive components before refitting the chain and adjusting to manufacturer specifications / requirements.
- Produce a written report on their findings

You will be provided with relevant machine, test specifications and a report form by centre.

The chain drive mechanism supplied is left to the centres discretion and could be an elevator chain, a roller chain, duplex chain or triplex

The machine that is used for the assessment should be appropriate for the time allocated.

The centre will provide you and assessor with any site and task specific requirements including a risk assessment. The assessment ends when all equipment is packed away.

Time: 1 hour 45 minutes

Task is achieved at Pass/ Merit/ Distinction/ Fail

Apprentice name:

Date:

Candidates are **not** permitted to use the checklist to work from when completing the practical tasks.

All criteria must be achieved and the criteria indicated can be awarded marks based on the descriptors in the table.

Activity number and description	Mark awarded		
	1	**2**	**3**
1. Provide a verbal risk assessment for the task.			
2. Select and use the correct personal protective equipment			
3. Identify the procedures that are required to carry out the task			
4. Select the correct equipment and use in an appropriate manner			
5. Undertake removal of the drive chain inspect the chain drive components and refit.			
6. Produce a written report on the findings			
7. Restore machine, work area and equipment to its per-assessment state			
Q1 – Explain the step by step process for removing roller chain from a machine?			
Q2 – How would you measure the chain for wear?			
Q3 - How would you make the machine safe before working on the chain mechanism?			
Total	/22		
Grade			
Apprentice signature and date			
Independent Assessor signature and date			

Converting marks to grades	
Grade	**Mark ranges**
Distinction	90% = 20
MErit	75% = 17
Pass	60% = 14

The marks for each activity should be totalled and the conversion chart used to determine the grade for each task.

Practical observation descriptor table

Task – Remove, replace and adjust a roller chain.

		Grading descriptors		
Graded activity number and description from check list		**1 Mark**	**2 Marks**	**3 Marks**
1	Provide a verbal risk assessment for the task.	The apprentice showed a limited understanding of the risk assessment process.	The apprentice showed a detailed understanding of the risk assessment process.	The apprentice showed comprehensive understanding of the risk assessment process.
2	Select and use the correct personal protective equipment.	Apprentice selected and used appropriate PPE required for the task, according to the risk assessment/ site requirements.		
3	Identify the procedures that are required to carry out the task	Apprentice identified the correct procedures to carry out the task using the appropriate information		
4	Select the correct equipment and use in an appropriate manner	Apprentice selected the appropriate tools and equipment required for the task, according to the manufacturer's procedures.	Apprentice selected the correct tools and equipment required for the task, according to the manufacturer's procedures and applied them in an appropriate manner.	
5	Undertake removal of the drive chain inspect the chain drive components and refit.	The apprentice worked to a basic standard but met the procedures requirements. Good manual handling techniques used.	The apprentice worked to a detailed standard followed the procedure to each point and met the criteria, completing the task methodically and all the appropriate parts	The apprentice worked to a comprehensive standard followed the procedure to each point and met the criteria, completing the task methodically and all the

			removed and checked and refitted	appropriate parts removed and thoroughly checked and confirmed as serviceable. Settings checked and re-checked
6	Produce a written report on the findings	Apprentice recorded basic details of work undertaken and reported limited information on findings	Apprentice recorded detailed information of the work undertaken and the findings. Comparisons made against manufacturer's data and a serviceability conclusion reached	Apprentice recorded comprehensive information in an appropriate format and reached a serviceability conclusion providing evidence of comparison with manufacturer's reference data.
7	Restore machine, work area and equipment to its per-assessment state	The candidate restored the machine to pre assessment state. Cleaned the work area and tools.	The candidate restored the machine to pre assessment state. Cleaned the work area and tools and stored the tools and equipment in a suitable location.	
Q1	Explain the step by step process for removing roller chain from a machine?	The candidate gave a basic answer, which may include: • Isolate machine and ensure drive components cannot rotate accidentally, • Note direction of joining link • Slacken tension from chain • Remove jointing link • Make note of chain path • Safely store parts,	The candidate gave a detailed answer, which may include: • Isolate machine and ensure drive components cannot rotate accidentally, • Note direction of joining link • Slacken tension from chain • Remove jointing link • Make note of chain path • Safely store parts, • Remove chain	The candidate gave a comprehensive answer and could explain the reasons for each action: • Isolate machine and ensure drive components cannot rotate accidentally, • Note direction of joining link • Slacken tension from chain • Remove jointing link • Make note of chain path

		• Remove chain		• Safely store parts • Remove chain
Q2	How would you measure a chain for wear?	The candidate gave a basic answer, which may include: • Multiply the pitch of the chain x number of links to give the length new. Fully extend worn chain and measure length to establish the stretch or wear	The candidate gave a detailed answer and offered a range of measuring possibilities: • Multiply the pitch of the chain x number of links to give the length new. Fully extend worn chain and measure length to establish the stretch or wear	
Q3	How would you make the machine safe before working on the chain mechanism?	The apprentice gave a basic answer, which may include: • Disconnect the drive to the chain • Stop engine • Isolate electric supply • Chock the machine to stop it rotating • Lock the drive mechanism	The apprentice displayed a competent knowledge of how to safeguard against accident, personal injury and damage to the machine: • Disconnect the drive to the chain • Stop engine • Isolate electric supply • Chock the machine to stop it rotating • Lock the drive mechanism	

Assessment feedback form

Apprentice name

Apprentice number

IEPA name

Date of assessment

Task	Feedback

I confirm that this assessment has been completed to the required standard and meets the

Date of final assessment decision

Assessment grade

requirements for validity, currency, authenticity and sufficiency.

IEPA signature and date:

Assessment 700/750, 702/752, 704/754, 706/756, 708/758
Practical Observation

Task 8 - Overhaul wheel hub containing taper roller bearings

Task instructions for independent end-point assessors

Before starting the task the apprentice is required to provide a verbal risk assessment which will form part of the assessment.

The apprentice is required to;

- Remove **one** wheel hub assembly from the machine
- Dismantle the wheel hub assembly
- Clean, inspect,
- Replace/ re-fit, lubricate and re-adjust to manufacturer specifications
- Reinstate machine to operational state
- Write up job card recording findings

The assessment ends when all tooling and equipment is packed away

The machine / equipment used for the assessment should be appropriate for the time allocated.

The centre will provide you and the apprentice with any site and task specific requirements including a risk assessment.

The centre will provide manufacturers technical reference data for the task, a manufacturers service manual if applicable together with a job card to enable the findings and work details to be recorded

The apprentice is not required to road test any piece of machinery.

The model answers given for oral questions are not an exhaustive list, if applicable other suitable answers may be accepted.

Time for assessment: 1 hour 45 minutes.

Task is achieved at Pass/ Merit/ Distinction/ Fail

Task instructions for centres / end-point assessment customers

Before starting the task the apprentice is required to provide a verbal risk assessment which will form part of the assessment.

The apprentice is required to;

- Remove **one** wheel hub assembly from the machine
- Dismantle the wheel hub assembly
- Clean, inspect,
- Replace/ re-fit, lubricate and re-adjust to manufacturer specifications
- Reinstate machine to operational state
- Write up job card recording findings

The assessment ends when all tooling and equipment is packed away

The apprentice is not required to road test any piece of machinery.

The machine / equipment used for the assessment should be appropriate for the time allocated, and supplied in a clean serviceable condition.

The centre will provide manufacturers technical reference data for the task, a manufacturers service manual if applicable together with a job card to enable the findings and work details to be recorded

The centre will provide the assessor and the apprentice with any site and task specific requirements including a risk assessment.

Time for assessment: 1 hour 45 minutes.

Task is achieved at Pass/ Merit/ Distinction/ Fail

Task instructions for apprentices

Before starting the task you are required to provide a verbal risk assessment which will form part of the assessment.

You are required to;

- Remove **one** wheel hub assembly from the machine
- Dismantle the wheel hub assembly
- Clean, inspect,
- Replace/ re-fit, lubricate and re-adjust to manufacturer specifications
- Reinstate machine to operational state
- Write up job card recording findings

The assessment ends when all tooling and equipment is packed away

You are not required to road test any piece of machinery.

The machine / equipment used for the assessment should be appropriate for the time allocated, and supplied in a clean serviceable condition.

The centre will provide manufacturers technical reference data for the task, a manufacturers service manual if applicable together with a job card to enable the findings and work details to be recorded

The centre will provide you and the assessor with any site and task specific requirements including a risk assessment.

Time for assessment: 1 hour 45 minutes.

Task is achieved at Pass/ Merit/ Distinction/ Fail

Apprentice name:

Date:
Machine type for assessment:

Two wheeled tractor or similar machine.

Apprentices are not permitted to use the checklist to work from when completing the practical tasks.

All criteria must be achieved and the criteria indicated can be awarded marks based on the descriptors in the table.

Activity number and description	Mark awarded		
	1	**2**	**3**
1. Provide a verbal risk assessment for the task			
2. Select and use the correct personal protective equipment.			
3. Identify the procedures that are required to carry out the task			
4. Select the correct equipment for the task and use in an appropriate manner			
5. Remove and dismantle the wheel hub assembly			
6. Clean, inspect all parts			
7. Replace/ re-fit, lubricate and re-adjust to manufacturer specifications			
8. Write up job card recording findings			
9. Restore equipment work area to pre-assessment state.			
Q1. When inspecting a taper roller bearing assembly, what should be observed			
Q2. What are the dangers of using compressed air to clean a bearing?			
Q3. What would happen to the bearing if the pre load was set too tight?			
Total	/29		
Grade			
Apprentice signature and date			
Independent Assessor signature and date			

Converting marks to grades	
Grade	**Mark ranges**
Distinction	90% = 26
Merit =	75% = 22
Pass	65% = 19

The marks for each activity should be totalled and the conversion chart used to determine the grade for each task.

Practical observation descriptor table

Task 8 – Overhaul wheel hub containing taper roller bearings

		Grading descriptors		
Graded activity number and description from check list		**1 Mark**	**2 Marks**	**3 Marks**
1	Provide a verbal risk assessment for the task.	The apprentice showed basic understanding of a risk assessment process and the risks associated with the task.	The apprentice showed a detailed understanding of the risk assessment process and the risks associated with the task.	The apprentice showed a comprehensive understanding of the risk assessment process and risks associated with the task covering personal, environmental and bystanders.
2	Select and use the correct personal protective equipment	Apprentice selected and used appropriate PPE required for the task according to the risk assessment/site requirements.		
3	Identify the procedures to carry out the task	Apprentice identified correct procedures to carry out the task		
4	Select the correct equipment for the task and used in an appropriate manner	Apprentice selected the basic equipment for the task and used in an appropriate manner	Apprentice selected a comprehensive range of equipment for the task and used in an appropriate manner. Working in an ordered logical way employing industry best practice, avoided introducing contamination to the wheel bearings by working in a clean tidy way	
5	Remove and dismantle the wheel hub assembly	The apprentice used basic practices to remove and dismantle the wheel hub assembly. Some components	The apprentice used detailed practices to remove and dismantle the wheel hub assembly. Paying attention to detail	The apprentice used comprehensive practices to remove and

		unnecessarily damaged in dismantling process	and avoiding un-necessary damage in the dismantling process	dismantle the wheel hub assembly Paying attention to detail and avoiding un-necessary damage in the dismantling process. . Laid out all parts in a logical order
6	Clean, inspect all parts	The apprentice cleaned the wheel hub and bearings and gave the components a basic inspection	The apprentice cleaned the wheel hub and bearings and gave the components a detailed inspection using industry best practices to clean and establish serviceability	The apprentice cleaned the wheel hub and bearings and gave the components a comprehensive inspection using industry best practices, checking not only the hub bearings and seals but also the axle shaft and wheel fixings to establish serviceability
7	Replace/ re-fit, lubricate and re-adjust to manufacturer specifications	Apprentice completed basic rebuild without damaging parts, greased bearings and set up wheel bearings	Apprentice completed rebuild using detailed best practices, followed manufacturer's procedures in a methodical manner confirming accurate setting of bearings and packed the hub with grease	Apprentice completed rebuild using detailed best practices, followed manufacturer's procedures in a methodical manner confirming accurate setting of bearings and packed the hub with grease. Care was taken to avoid contamination of components and any seals were installed correctly.
8	Write up job card recording findings	Apprentice recorded basic findings.	Apprentice recorded detailed information in an appropriate format	Apprentice recorded comprehensive information in an appropriate format provided comparison with

				manufacturer's reference data. Apprentice could identify further actions that are required.
9	Restore equipment work area to pre-assessment state.	Apprentice gave the machine / rig and work area a basic clean and stored the tools and equipment in a suitable location.	Apprentice cleaned machine / rig, work area and tools carefully on completion of the test and stored correctly. Checks were made to ensure it was ready for the next operational use.	Apprentice cleaned machine / rig, work area and tools comprehensively on completion of the test and stored correctly. Checks were made to ensure it was ready for the next operational use. All waste materials were disposed of properly
Q1	When inspecting a taper roller bearing assembly, what should be observed?	The apprentice gave a basic answer. Answer- 1. Condition of the rollers, cages and bearing surfaces. 2. The cleanliness of the lubricant from dirt and metal filings etc. 3. The condition of any seals and covers. 4. Any other suitable answer	The apprentice gave a detailed answer. Answer- 1. Condition of the rollers, cages and bearing surfaces. 2. The cleanliness of the lubricant from dirt and metal filings etc. 3. The condition of any seals and covers. 4. Any other suitable answer	The apprentice gave a comprehensive answer covering all points. Could determine the causes of failed and worn parts. Answer- 1. Condition of the rollers, cages and bearing surfaces. 2. The cleanliness of the lubricant from dirt and metal filings etc. 3. The condition of any seals and covers. 4. Any other suitable answer

Q2	What are the dangers of using compressed air to clean a bearing?	The apprentice gave a basic explanation. Answer- 1. The bearing may rotate above its maximum designed speed and could damage the bearing surface. 2. The bearing may disintegrate causing harm to bystanders Any other suitable answer	The apprentice gave a detailed answer. Answer- 1. The bearing may rotate above its maximum designed speed and could damage the bearing surface. 2. The bearing may disintegrate causing harm to bystanders Any other suitable answer	
Q3	What would happen to the bearing if the pre load was set too tight?	The apprentice gave a basic explanation. Answer- 1. The bearing would suffer premature wear. 2. The bearing race and rollers would overheat and turn blue in colour. Any other suitable answer	The apprentice gave a detailed explanation. Answer- 1. The bearing would suffer premature wear. 2. The bearing race and rollers would overheat and turn blue in colour. Any other suitable answer	

Assessment feedback form

Apprentice name

Apprentice number

IEPA name

Date of assessment

Task	Feedback

I confirm that this assessment has been completed to the required standard and meets the

Date of final assessment decision

Assessment grade

requirements for validity, currency, authenticity and sufficiency.

IEPA signature and date:

Assessment 700/750, 702/752, 704/754, 706/756, 708/758
Practical Observation

Task 9 - Set Tractor Wheel Widths

Task instructions for independent end-point assessors

Before starting the task the apprentice is expected to provide a verbal risk assessment which will form part of the assessment.

Apprentices are required to record the front wheel width settings before and after finishing the task. The requirement is to adjust the front wheel widths on a tractor in accordance with workshop/ operators manual. The setting of the front wheel widths to be obtained will be determined in conjunction with the assessor and assessment centre.

The assessment ends when all tooling and equipment is packed away. If front wheel fenders are fitted then these should also be adjusted.

Apprentice to be provided with relevant machine, workshop/ operator's manual, note paper and writing materials by the centre.

The machine that is used for the assessment should be appropriate for the time allocated. The assessor has the discretion to decide if the adjustment is carried out on one side or both depending on the complexity of the task

The centre or employer will provide you and the apprentice with any site or task specific requirements.

The model answers given to the questions are not exhaustive and any other correct answers may be accepted.

Time: 1 hour 45 minutes

Task is achieved at Pass/ Merit/ Distinction/ Fail

Task instructions for centres / end-point assessment customers

Before starting the task the apprentice is expected to provide a verbal risk assessment which will form part of the assessment.

Apprentices are required to record the front wheel width settings before and after finishing the task. The task requirement is to adjust the front wheel widths on a tractor in accordance with workshop/ operators manual. The setting of the front wheel widths to be obtained will be determined by the assessor and or the assessment centre.

You are required to provide the assessor and apprentice with any job-specific requirements e.g. workshop / operator's manual, note paper and writing materials to record the measurements taken.

The machine that is used for the assessment should be appropriate for the time allocated, in a good clean condition with all wheel fixings in a good state.

The assessor has the discretion to decide if the adjustment is carried out on one side or both depending on the complexity of the task

You will provide the assessor and the apprentice with any site and task specific requirements including a risk assessment.

Time: 1 hour 45 minutes

Task is achieved at Pass/ Merit/ Distinction/ Fail

Task instructions for apprentices

Before starting the task you are expected to provide a verbal risk assessment which will form part of the assessment.

You are required to identify and record the wheel settings of the machine both before the task is started and when completed.

The task requirement is to adjust the front wheel widths on a tractor in accordance with workshop / operators manual. The setting of the front wheel widths to be obtained will be determined in conjunction with the assessor and assessment centre.

The assessor has the discretion to decide if the adjustment is carried out on one side or both depending on the complexity of the task

If front wheel fenders are fitted then these should also be adjusted.

The assessment ends when all tooling and equipment is packed away. If front wheel fenders are fitted then these should also be adjusted.

The centre will provide you with any site and task specific requirements

Time: 1 hour 45 minutes

Task is achieved at Pass/ Merit/ Distinction/ Fail

Apprentice name:

Date:

Apprentices are **not** permitted to use the checklist to work from when completing the practical tasks, but may familiarise themselves with it prior to the observation.

All criteria must be achieved and the criteria indicated can be awarded marks based on the descriptors in the table.

Activity number and description	Mark awarded		
	1	**2**	**3**
1. Provide a verbal risk assessment for the task.			
2. Select and use the correct personal protective equipment.			
3. Identify the procedures that are required to carry out the task			
4. Select the correct equipment for the task and use in appropriate manner			
5. Undertake the task adjusting the wheel settings to the requested width and any additional adjustments required when altering the front wheel widths on a tractor.			
6. Carry out the work in a manner that minimises the risks to you and others and without incurring damage to the machine.			
7. Ensure machine is left in a safe manner and the work area and equipment is returned to its pre-assessment state.			
Q1 – What is the meaning of Toe-in?			
Q2 – What would cause wheel bolts to come loose			
Q3 - Why is it important that tyre pressures are set correctly			
Total	/19		
Grade			
Apprentice signature and date			
Independent Assessor signature and date			

Converting marks to grades	
Grade	**Mark ranges**
Distinction	90% = 17
Merit =	75% = 14
Pass	65% = 12

The marks for each activity should be totalled and the conversion chart used to determine the grade for each task.

Practical observation descriptor table

Task 9 – Set tractor wheel widths

		Grading descriptors		
Graded activity number and description from check list		**1 Mark**	**2 Marks**	**3 Marks**
1	Provide a verbal risk assessment for the task.	Apprentice showed a limited understanding of the risk assessment process and risks associated with task.	Apprentice showed a detailed understanding of the risk assessment process and risks associated with task.	Apprentice showed a comprehensive understanding of the risk assessment process and risks associated with task covering personal, environmental and bystander(s).
2	Select and use the correct personal protective equipment.	Apprentice selected and used appropriate PPE required for the task, according to the risk assessment/ site requirements.		
3	Identify the procedures that are required to carry out the task	Apprentice identified correct procedures which include safely lifting the machine and removing the wheels and refastening them in a different position to obtain different wheel widths.	Apprentice identified correct procedures which include safely lifting the machine and removing the wheels and refastening them in a different position to obtain different wheel widths. Reference was made to the Operators/ Workshop manual and a logical approach employed	
4	Select the correct equipment for the task and use in appropriate manner	Apprentice selected and used appropriate equipment required for the task, according to the manufacturer's procedures.		
5	Undertake the task adjusting the wheel settings to the requested width and any additional adjustments	The apprentice was able to adjust the wheels to the required specification within the time allowed	The apprentice was able to adjust the wheels to the required specification within the time allowed. The wheels bolts and nuts were correctly tightened to the correct torque using the appropriate	The apprentice was able to adjust the wheels to the required specification within the time allowed. The wheels bolts and nuts were correctly

	required when altering the front wheel widths on a tractor.		equipment and any fenders fitted were also adjusted correctly.	tightened to the correct torque using the appropriate equipment and any fenders fitted were also adjusted correctly. The wheels stops and any other system requiring adjustment when wheel widths have been altered have also been checked and adjusted correctly.
6	Carry out the work in a manner that minimises the risks to you and others and without incurring damage to the machine.	Apprentice carried out the task in a manner that reduce risks and without damaging the machine or equipment.		
7	Ensure machine is left in a safe manner, work area and equipment is to be returned to its pre-assessment state.	The apprentice gave the equipment, machine and work area a basic clean and stored the equipment in a suitable location.	The apprentice cleaned equipment, machine and work area carefully on completion of task and stored it correctly. Checks were made to ensure it was ready for the next operational use. Machine was left safely parked with hydraulic implements in a safe stored position.	
Q1	What is the meaning of Tow-in?	The apprentice refers to Toe-in when the front edge of the wheels point inward, towards each other.	The apprentice is able to explain that Toe-in is the operating angle of front wheels. If the front edge of the wheels point inward, towards each other and can further explain that adjustment of toe-in is necessary to maintain proper steering control.	
Q2	What would cause wheel bolts to come loose?	Apprentice can explain that wheels bolts can come loose if they are not correctly tightened and checked after a period of time	The apprentice can give more detail as to why wheel bolts may come loose giving several reasons why wheel bolts can come loose including under tightening and over tightening of bolts, Not using the correct wheel bolts and incorrect	

			loading of the rims and front axle	
Q3	What effects tyre wear and the life of the tyre?	Basic answer would cover tyre wear and life of the tyre. Possible answers • Incorrect tracking • Under or over inflation • Overload • Lack of traction and wheel spin • The condition of the surface operated on • The excessive braking • Camber of the road	Apprentice can identify tyre wear but also explain that tyre wear can effect performance of the machine and also how it effects ground compaction. Possible answers • Incorrect tracking • Under or over inflation • Overload • Lack of traction and wheel spin • The condition of the surface operated on • The excessive braking • Camber of the road	

Assessment feedback form

Apprentice name

Apprentice number

IEPA name

Date of assessment

Task	Feedback

I confirm that this assessment has been completed to the required standard and meets the

Date of final assessment decision

Assessment grade

requirements for validity, currency, authenticity and sufficiency.

IEPA signature and date:

Assessment 700/750, 702/752, 704/754, 706/756, 708/758
Practical Observation

Task 10 - Coolant System Test

Task instructions for independent end-point assessors

Before starting the task the apprentice is expected to provide a verbal risk assessment which will form part of the assessment.

The apprentice is required to carry out tests on a coolant system covering the following;

- A visual check of cooling system components
- Identification of the equipment required to carry out a cooling system test
- Establish the condition of the coolant within the system,
- Carry out a cooling system pressure test
- Test the operational condition of a thermostat
- Complete a report outlining work undertaken, tests results and findings

The assessment ends when all tooling and equipment is packed away

Apprentice to be provided with relevant machine, manufacturers / operator's manual, report sheet by the centre.

The apprentice is not required to remove a thermostat from a working system.
A thermostat and hot water source will be provided to carry out this test.

The machine that is used for the assessment should be appropriate for the time allocated.

The centre will provide you and the apprentice with any site and task specific requirements including a risk assessment.

The model answers given for oral questions are not an exhaustive list, if applicable other suitable answers may be accepted.

The machine used for the assessment should be appropriate for the time allocated. For example: A machine with a liquid cooled internal combustion engine fitted.

Time for assessment: 1 hour 45 minutes.

Task is achieved at Pass/ Merit/ Distinction/ Fail

Task instructions for centres / end-point assessment customers

Before starting the task the apprentice is expected to provide a verbal risk assessment which will form part of the assessment.

The apprentice is required to carry out tests on a coolant system covering the following:

- A visual check of cooling system components
- Identification of the equipment required to carry out a cooling system test
- Establish the condition of the coolant within the system,
- Carry out a cooling system pressure test
- Test the operational condition of a thermostat
- Complete a report outlining work undertaken, tests results and findings

The apprentice is not required to remove a thermostat from a working system.

A thermostat and hot water source will be provided to carry out this test.

The machine that is used for the assessment should be appropriate for the time allocated.

You will provide assessor and the apprentice with any site and task specific requirements including a risk assessment.

You will provide the relevant machine, manufacturers / operator's manual, report sheet for use in the task.

The machine that is used for the assessment should be appropriate for the time allocated.

Time for assessment: 1 hour 45 minutes.

Task is achieved at Pass/ Merit/ Distinction/ Fail

Task instructions for apprentices

Before starting the task you are expected to provide a verbal risk assessment which will form part of the assessment.

You are required to carry the following tasks on a coolant system:

- A visual check of the cooling system components
- Identification of the equipment required to carry out cooling system tests
- Establish the condition of the coolant within the system
- Carry out a cooling system pressure test
- Test the operational condition of a thermostat
- Complete a report outlining work undertaken, tests results and findings

You are not required to remove a thermostat from a working system.

A thermostat and hot water source will be provided to carry out this test.

You will be required to complete the job card for this task.

The assessment ends when all tooling and equipment is packed away.

Time for assessment: 1 hour 45 minutes.

Task is achieved at Pass/ Merit/ Distinction/ Fail

Apprentice name:

Date:
Machine type for assessment:
Working Functioning liquid cooled internal combustion engine.

Apprentices are not permitted to use the checklist to work from when completing the practical tasks.

All criteria must be achieved and the criteria indicated can be awarded marks based on the descriptors in the table.

Activity number and description	**Mark awarded**		
	1	**2**	**3**
1. Provide a verbal risk assessment for the task			
2. Select and use the correct personal protective equipment.			
3. Identify the procedures that are required to carry out the task			
4. Select the correct equipment for the test, set up and use in an appropriate manner			
5. Carry out a visual check of the cooling system components and establish the condition of the coolant within the system			
6. Carry out a cooling system pressure test and test the opening temperature of a thermostat			
7. Complete a report outlining work undertaken, tests results and findings			
8. Restore machine, work area and equipment to pre-assessment state.			
Q 1 When inspecting a cooling System what should be checked?			
Q 2 What dangers are associated with testing a cooling system and checking the condition of the coolant?			
Q 3 What effect would the incorrect coolant agent have on the system?			
Total	/27		
Grade			
Apprentice signature and date			
Independent Assessor signature and date			

Converting marks to grades	
Grade	**Mark ranges**
Distinction	90% = 24
Merit =	75% = 20
Pass	65% = 18

The marks for each activity should be totalled and the conversion chart used to determine the grade for each task.

Practical observation descriptor table

Task 10 – Coolant System Test

		Grading descriptors		
Graded activity number and description from check list		**1 Mark**	**2 Marks**	**3 Marks**
1	Provide a verbal risk assessment for the task.	The Apprentice showed only a limited understanding of a risk assessment process and the risks associated with the task.	The Apprentice showed a detailed understanding of the risk assessment process and the risks associated with the task.	The Apprentice showed a comprehensive understanding of the risk assessment process and risks associated with the task covering personal, environmental and bystanders.
2	Select and use the correct personal protective equipment.	Apprentice selected and used appropriate PPE required for the task according to the risk assessment/site requirements.		
3	Identify the procedures that are required to do the task	Apprentice identified the correct procedures to carry out the task using the appropriate information		
4	Select the correct equipment, set up and use in an appropriate manner	Apprentice selected and used appropriate equipment required for the task, according to the manufacturer's procedures.	Apprentice selected and used appropriate equipment required for the task, according to the manufacturer's procedures. Equipment connected to the system taking precautions to contain coolant spill	Apprentice selected and used appropriate equipment required for the task, according to the manufacturer's procedures. Equipment connected avoiding contamination to the system and taking precautions to contain fluid spill. Apprentice showed awareness of the calibration of the equipment

5	Carry out a visual check of the cooling system components and establish the condition of the coolant within the system	Apprentice carried out a basic visual inspection of the cooling system and established the condition of the coolant	Apprentice carried out a detailed visual inspection of the cooling system establishing that the condition of the coolant was within the engine manufacturers specifications	Apprentice carried out a comprehensive visual inspection of the cooling system and established that the condition of the coolant was within the engine manufacturers specifications and verified that all components were serviceable
6	Carry out a cooling system pressure test and test the opening temperature of a thermostat	Apprentice carried out a basic system pressure test and established that the thermostat was working	Apprentice carried out a detailed system pressure test and established the thermostat opening temperature	Apprentice carried out a comprehensive system pressure test and established that the thermostat was working and compared it to manufacturers specifications
7	Complete a report outlining work undertaken, tests results and findings	Apprentice recorded the basic details in a report	Apprentice compiled a detailed report recording test results in an appropriate format.	Apprentice compiled a comprehensive report recording test results in an appropriate format and provided evidence of comparison with manufacturer's reference data.
8	Restore equipment machine and work area to pre-assessment state.	The Apprentice cleaned the machine, work area and tools and stored the equipment in a suitable location.	The Apprentice cleaned the machine, work area and tools and stored the equipment in a suitable location and returned the work area to its pre-assessment state	
Q1	When inspecting a cooling System what should be checked?	The Apprentice gave a basic answer. Possible answers • The cleanliness of the system including the radiator. • Inspection of the drive belt and viscous coupling if fitted.	The Apprentice gave a detailed answer. Possible answers • The cleanliness of the system including the radiator. • Inspection of the drive belt and viscous coupling if fitted.	The Apprentice gave a comprehensive answer covering all areas of the cooling system. Possible answers • The cleanliness of the system including the radiator.

		• The condition of the coolant within the system. • inspection for coolant leaks • Abnormal noise from the water pump, • Radiator hotspots.	• The condition of the coolant within the system. • inspection for coolant leaks • Abnormal noise from the water pump, • Radiator hotspots.	• Inspection of the drive belt and viscous coupling if fitted. • The condition of the coolant within the system. • inspection for coolant leaks • Abnormal noise from the water pump, • Radiator hotspots.
Q2	What dangers are associated with testing a cooling system and checking the condition of the coolant?	The Apprentice gave a basic answer. Possible answers • If the cooling system is at operating temperature you are at risk of having coolant spray over you causing severe burns. • Health & Safety hazard spraying coolant over the surrounded work area. • Pressurising the cooling system above 1 bar resulting in a water hose being blown off. Health & Safety Hazard	The Apprentice gave a detailed answer covering two or more answers areas of the cooling system. Possible answers • If the cooling system is at operating temperature you are at risk of having coolant spray over you causing severe burns. • Health & Safety hazard spraying coolant over the surrounded work area. • Pressurising the cooling system above 1 bar resulting in a water hose being blown off. Health & Safety Hazard	The Apprentice gave a comprehensive answer covering all areas of the dangers posed cooling system. Possible answers • If the cooling system is at operating temperature you are at risk of having coolant spray over you causing severe burns. • Health & Safety hazard spraying coolant over the surrounded work area. • Pressurising the cooling system above 1 bar resulting in a water hose being blown off. Health & Safety Hazard

Q3	What effect would the incorrect coolant have on the system?	The Apprentice gave a basic answer. Answer- • Insufficient corrosive protection. • Damage to water pump. • Damage to internal components • Damage in extreme temperature situations	The Apprentice gave a detailed answer Answer- • Insufficient corrosive protection. • Damage to water pump. • Damage to internal components • Damage in extreme temperature situations	

Assessment feedback form

Apprentice name

Apprentice number

IEPA name

Date of assessment

Task	Feedback

I confirm that this assessment has been completed to the required standard and meets the

Date of final assessment decision

Assessment grade

requirements for validity, currency, authenticity and sufficiency.

IEPA signature and date:

Assessment 700/750, 702/752, 704/754, 706/756, 708/758
Practical Observation

Task 11 – Set Engine Valve Clearances

Task instructions for independent end-point assessors

Before starting the task the apprentice is required to provide a verbal risk assessment which will form part of the assessment.

Apprentices are required to;

- Check and reset valve clearances on an internal combustion engine with 3 or 4 cylinders to manufactures specification.
- Identify any valves, exhaust or inlet that require adjustment and adjust to manufactures recommended settings
- Record and report findings

The assessment ends when all the equipment is packed away

Apprentice to be provided with relevant information and specifications to enable task to be carried out and a recording form which will enable the apprentice to record the findings, compare the findings to the correct specifications and record the adjustments made.

The machine or static rig that is used for the assessment should be appropriate for the time allocated.

The centre will provide the assessor and the apprentice with any site and task specific requirements including a risk assessment.

The models answers given for oral questions are not an exhaustive list, if applicable other suitable answers may be accepted.

Time: 1 hour 45 minutes

Task is achieved at Pass/ Merit/ Distinction/ Fail

Task instructions for centres / end-point assessment customers

Before starting the task the apprentice is required to provide a verbal risk assessment which will form part of the assessment.

Apprentices are required to;

- Check and reset valve clearances on an internal combustion engine with 3 or 4 cylinders to manufactures specification.
- Identify any valves, exhaust or inlet that require adjustment and adjust to manufactures recommended settings
- Record and report findings

The assessment ends when all the equipment is packed away

Apprentice to be provided with relevant information and specifications to enable task to be carried out and a recording form which will enable the apprentice to record the findings, compare the findings to the correct specifications and record the adjustments made.

The machine or static rig that is used for the assessment should be appropriate for the time allocated

You will provide the assessor and the apprentice with any site and task specific requirements including a risk assessment.

Time: 1 hour 45 minutes

Task is achieved at Pass/ Merit/ Distinction/ Fail

Task instructions for apprentices

Before starting the task you are required to provide a verbal risk assessment which will form part of the assessment.

You are required to;

- Check and reset valve clearances on an internal combustion engine with 3 or 4 cylinders to manufactures specification.
- Identify any valves, exhaust or inlet that require adjustment and adjust to manufactures recommended settings
- Record and report findings.

The assessment ends when all the equipment is packed away

You will be provided with relevant information and specifications to enable task to be carried out and a recording form which will enable the apprentice to record the findings, compare the findings to the correct specifications and record the adjustments made.

The machine or static rig that is used for the assessment should be appropriate for the time allocated.

The centre will provide you with any site and task specific requirements including a risk assessment.

Time: 1 hour 45 minutes

Task is achieved at Pass/ Merit/ Distinction/ Fail

Apprentice name:

Date:

Apprentices are **not** permitted to use the checklist to work from when completing the practical tasks.

All criteria must be achieved, the criteria indicated can be awarded marks based on the descriptors in the table.

Activity number and description	Mark awarded		
	1	**2**	**3**
1. Provide a verbal risk assessment for the task.			
2. Select and use the correct personal protective equipment.			
3. Identify the procedures that are required to carry out the task			
4. Select the correct equipment for the task and use in appropriate manner			
5. Check valve clearances and adjust as required			
6. Record findings and compare with Manufacturer's reference data.			
7. Restore machine or rig, work area and equipment is to pre-assessment state.			
Q1 – What is the meaning of valve clearance?			
Q2 – What is the effect of setting the valves at the incorrect engine temperature?			
Q3 - What causes valve clearances to change over time?			
Total	/22		
Grade			
Apprentice signature and date			
Independent Assessor signature and date			

Converting marks to grades	
Grade	**Mark ranges**
Distinction	90% = 20
Merit =	75% = 17
Pass	65% = 14

The marks for each activity should be totalled and the conversion chart used to determine the grade for each task.

Practical observation descriptor table

Task 11 – Set Engine Valve Clearances

		Grading descriptors		
Graded activity number and description from check list		**1 Mark**	**2 Marks**	**3 Marks**
1	Provide a verbal risk assessment for the task.	Apprentice showed a basic understanding of the risk assessment process and risks associated with task.	Apprentice showed a detailed understanding of the risk assessment process and risks associated with task.	Apprentice showed a comprehensive understanding of the risk assessment process and risks associated with task covering personal, environmental and bystander(s).
2	Select and use the correct personal protective equipment.	Apprentice selected and used appropriate PPE required for the task, according to the risk assessment/ site requirements.		
3	Identify the procedures that are required to carry out the task	Apprentice identified the correct procedures to carry out the task using the appropriate information.		
4	Select the correct equipment for the task and use in appropriate manner	Apprentice selected and used some of the appropriate equipment required for the task, according to the manufacturer's procedures.	Apprentice selected and used all the appropriate equipment required for the task, according to the manufacturer's procedures. The selection of equipment enabled accurate adjustments to be made	Comprehensive selection and use of all the appropriate equipment required for the task, according to the manufacturer's procedures. The selection of equipment enabled accurate measurements and adjustments to be taken.
5	Check valve clearances and adjust as required	The apprentice's work adequately met the basic specification and the valves were adjusted within tolerance.	The apprentice's work adequately met the specification and the task was undertaken with the valves being identified and adjusted correctly in the correct sequence	The apprentice selected the appropriate valves to adjust and in the correct sequence turning the engine through the correct

				rotation and degrees and set to specification. The apprentice worked through the task methodically.
6	Record findings and compare with Manufacturer's reference data.	Apprentice recorded information in an appropriate format but only provided basic information on the findings.	Apprentice recorded information in an appropriate format and provided detailed information on the findings. Results were recorded and compared against manufacturer specifications.	Apprentice recorded comprehensive information in an appropriate format and provided information on the findings. All the correct information was recorded and compared against manufacturer specifications. Apprentice can identify if further actions are required.
7	Restore machine or rig, work area and equipment is to pre-assessment state.	The apprentice gave the equipment, machine and work area a basic clean and stored the equipment in a suitable location.	The apprentice cleaned equipment, machine and work area carefully on completion of task and stored it correctly. Checks were made to ensure it was ready for the next operational use.	
Q1	Q1 – What is the meaning of valve clearance?	Basic answer would be that Valve Clearance is the gap between the Rocker Arms and the valve tappet / stem. .	A detail answer would be that Valve Clearance is the gap between the Rocker Arms and the valve tappet / stem. Reasons were given why this action was necessary	
Q2	Q2 – Why is it important to set valve clearances accurately?	The basic answer is that valves with incorrect clearances could cause engine faults.	The detailed answer is that valves with incorrect clearances could cause engine faults which may include; • Misfire • Valve burnout • Reduce engine performance • Emissions Poor starting	
Q3	Q3 - What causes valve clearances to change over time?	Basic explanation covering engine wear	Detailed explanation covering: • Engine wear in valve train • Incorrect service intervals • Valve seat wear	

Assessment feedback form

Apprentice name

Apprentice number

IEPA name

Date of assessment

Task	Feedback

I confirm that this assessment has been completed to the required standard and meets the

Date of final assessment decision

Assessment grade

requirements for validity, currency, authenticity and sufficiency.

IEPA signature and date:

Assessment 700/750, 702/752, 704/754, 706/756, 708/758
Practical Observation

Task 12 - Set up drive line components

Task instructions for independent end-point assessors

Before starting the task the apprentice is required to provide a verbal risk assessment which will form part of the assessment.

The Apprentice is required to remove a bevel gear set from an assembly. The assembly will then need to be re-built setting up bearings, back lash and mesh to manufacturers' specifications.
The work is to be carried out on an angle drive gearbox or axle rig.

The assessment ends when all the equipment is packed away

Apprentice to be provided with relevant assembly / component information and specifications

The assembly that is used for the assessment should be appropriate for the time allocated.

The centre will provide the assessor and the apprentice with any site and task specific requirements including a risk assessment.

The model answers given for oral questions are not an exhaustive list; if applicable other suitable answers may be accepted.

Time for assessment: 1 hour 45 minutes.

Task is achieved at Pass/ Merit/ Distinction/ Fail

Task instructions for centres / end-point assessment customers

Before starting the task the apprentice is required to provide a verbal risk assessment which will form part of the assessment.

The Apprentice is required to remove a bevel gear set from an assembly. The assembly will then need to be re-built setting up bearings, back lash and mesh to manufacturers' specifications.
The work is to be carried out on an angle drive gearbox or axle rig.

The assessment ends when all the equipment is packed away

Apprentice to be provided with relevant assembly / component information and specifications

The assembly that is used for the assessment should be appropriate for the time allocated.

You will provide the assessor and the apprentice with any site and task specific requirements including a risk assessment.

Time for assessment: 1 hour 45 minutes.

Task is achieved at Pass/ Merit/ Distinction/ Fail

Task instructions for apprentices

Before starting the task the apprentice is required to provide a verbal risk assessment which will form part of the assessment.

You are required to remove a bevel gear set from an assembly. The assembly will then need to be re-built setting up bearings, back lash and mesh to manufacturers' specifications.

The work is to be carried out on an angle drive gearbox or axle rig.

The assessment ends when all the equipment is packed away

You will be provided with relevant assembly / component information and specifications

The assembly that is used for the assessment should be appropriate for the time allocated.

The centre will provide the assessor and the apprentice with any site and task specific requirements including a risk assessment.

Time for assessment: 1 hour 45 minutes.

Task is achieved at Pass/ Merit/ Distinction/ Fail

Apprentice name:

Date:

Process used for the test:

Apprentices are **not** permitted to use the checklist to work from when completing the practical tasks.

All criteria must be achieved and the criteria indicated can be awarded marks based on the descriptors in the table.

Activity number and description	Mark awarded		
	1	**2**	**3**
1 Provide a verbal risk assessment for the task.			
2 Select and use the correct personal protective equipment			
3 Identify the procedures that are required to carry out the task			
4 Select the correct equipment for the task, set up and use in an appropriate manner			
5 Dismantle assembly			
6 Rebuild assembly to specifications			
7 Restore assembly, work area and equipment to its pre-assessment state			
Q1 Why is it important to use the correct lubricant specification for gear sets contained in an assembly?			
Q2 What are the possible causes of a noisy gear set?			
Total	/22		
Grade			
Apprentice signature and date			
Independent Assessor signature and date			

Converting marks to grades	
Grade	**Mark ranges**
Distinction	90% = 20
Merit =	75% = 17
Pass	65% = 14

The marks for each activity should be totalled and the conversion chart used to determine the grade for each task.

Practical observation descriptor table

Task 12 – Set up drive line components

		Grading descriptors		
Graded activity number and description from check list		**1 Mark**	**2 Marks**	**3 Marks**
1	Provide a verbal risk assessment for the task.	Apprentice showed a limited understanding of the risk assessment process and risks associated with task.	Apprentice showed a detailed understanding of the risk assessment process and risks associated with task.	Apprentice showed a comprehensive understanding of the risk assessment process and risks associated with task covering personal, environmental and bystander(s).
2	Select and use the correct personal protective equipment.	Apprentice selected and used appropriate PPE required for the task, according to the risk assessment/ site requirements.		
3	Identify the procedures that are required to carry out the task	Apprentice identified the correct procedures to carry out the task using the appropriate information		
4	Select the correct equipment for the task, set up and use in an appropriate manner	Apprentice selected and used appropriate equipment required for the task, according to the manufacturer's procedures.	Apprentice selected and used appropriate equipment required for the task, according to the manufacturer's procedures. The equipment used enabled an accurate set up of the assembly	Apprentice selected and used appropriate equipment required for the task, according to the manufacturer's procedures. The equipment used enabled an accurate set up of the assembly And tools used carefully so not to damage the assembly or the tools themselves.
5	Dismantle the assembly	Apprentice was able to disassemble the assembly	The Apprentice was able to disassemble the assembly and carefully laid out all the components	The Apprentice was able to disassemble the assembly and carefully laid out all the components being carefully to avoid contamination. Work

				was done in a methodical way
6	Rebuild assembly to specifications	The Apprentice was able to rebuild the assembly to achieve the correct specifications	The Apprentice was able to rebuild the assembly and achieved the correct specification taking care not to damage any components	The Apprentice was able to rebuild the assembly in a methodical way, checked and rechecked the settings to achieve the correct specification taking care not to damage any components and to carefully avoid contamination.
7	Restore assembly, work area and equipment to its pre-assessment state	The Apprentice cleaned the work area and tools and stored the equipment in a suitable location.	The Apprentice cleaned the work area and tools and stored the equipment in a suitable location and returned all the work area to its pre-assessment state	
Q1	Why is it important to use the correct lubricant specification for gear sets contained in an assembly?	Basic explanation covers lubrication and wear	Detailed explanation covers lubrication, wear to bearings and the possible failures	Comprehensive explanation expands answers to prevent gears and bearings failing prematurely, preventing overheating and foaming of oil. The lubrication of the components at the running temperature of the assembly
Q2	What are the possible causes of a noisy gear set?	Basic answers would be bearing failure or wear	Detailed answers would include the possibility of premature wear or excessive wear and incorrect settings in the assembly.	Comprehensive answers would include the possibility of premature wear or also wear due to the assembly being overloaded. Poorly set backlash and incorrect tooth contact.

				Incorrect settings of bearing such as pre-load and incorrect lubrication.

Assessment feedback form

Apprentice name

Apprentice number

IEPA name

Date of assessment

Task	Feedback

I confirm that this assessment has been completed to the required standard and meets the

Date of final assessment decision

Assessment grade

requirements for validity, currency, authenticity and sufficiency.

IEPA signature and date:

Assessment 700/750, 702/752, 704/754, 706/756, 708/758
Practical Observation

Task 13 - Sharpen and Reset a Cutting Device

Task instructions for independent end-point assessors

Before starting the task the apprentice is required to provide a verbal risk assessment which will form part of the assessment.

The Apprentice is required to;

- Remove and inspect the cutting device on a machine
- Sharpen the cutting device
- Replace the cutting device on the machine

The assessment is completed when all tools and equipment are packed away

Apprentice to be provided with a machine relevant to their pathway, machine information and specifications.

The machine that is used for the assessment should be appropriate for the time allocated.

The centre will prove the Assessor and the apprentice with any site and task specific requirements including a risk assessment.

The models answers given for oral questions are not an exhaustive list; if applicable other suitable answers may be accepted.

Time for assessment: 1 hour 45 minutes.

Task is achieved at Pass/ Merit/ Distinction/ Fail

Task instructions for centres / end-point assessment customers

Before starting the task the apprentice is required to provide a verbal risk assessment which will form part of the assessment.

The Apprentice is required to;

- Remove and inspect the cutting device on a machine
- Sharpen the cutting device
- Replace the cutting device on the machine

Apprentice to be provided with a machine relevant to their pathway, machine information and specifications by the centre

The machine that is used for the assessment should be appropriate for the time allocated.

The centre will provide the assessor and the apprentice with any site and task specific requirements including a risk assessment.

Time for assessment: 1 hour 45 minutes.

Task is achieved at Pass/ Merit/ Distinction/ Fail

Task instructions for apprentices

Before starting the task the apprentice is required to provide a verbal risk assessment which will form part of the assessment.

The Apprentice is required to;

- Remove and inspect the cutting device on a machine
- Sharpen the cutting device
- Replace the cutting device on the machine

The assessment is completed when all tools and equipment are packed away

Apprentice to be provided with a machine relevant to their pathway, machine information and specifications by the centre.

The machine that is used for the assessment should be appropriate for the time allocated.

The centre will provide the apprentice with any site and task specific requirements including a risk assessment.

Time for assessment: 1 hour 45 minutes.

Task is achieved at Pass/ Merit/ Distinction/ Fail

Apprentice name:

Date:

Machine used for assessment:

Apprentices are **not** permitted to use the checklist to work from when completing the practical tasks.

All criteria must be achieved and the criteria indicated can be awarded marks based on the descriptors in the table.

Activity number and description	Mark awarded		
	1	**2**	**3**
1. Provide a verbal risk assessment for the task.			
2. Select and use the correct personal protective equipment.			
3. Identify the procedures that are required to carry out the task			
4. Select the correct equipment and use in an appropriate manner			
5. Remove and inspect the cutting device on a machine			
6. Sharpen the cutting device			
7. Replace the cutting device on the machine			
8. Restore work area and equipment to its per-assessment state			
Q1 – Why is it important to ensure cutting devices when sharpened are balanced			
Q2- What different devices are fitted to cutting devices to provide protection to machines and how do these work			
Total	/24		
Grade			
Candidate signature and date			
Independent Assessor signature and date			

Converting marks to grades	
Grade	**Mark ranges**
Distinction	90% = 22
Merit =	75% = 18
Pass	65% = 16

The marks for each activity should be totalled and the conversion chart used to determine the grade for each task.

Practical observation descriptor table

Task 13 – Sharpen and Reset a Cutting Device

		Grading descriptors		
Graded activity number and description from check list		**1 Mark**	**2 Marks**	**3 Marks**
1	Provide a verbal risk assessment for the task.	The candidate showed only a basic understanding of a risk assessment process and the risks associated with the task.	The candidate showed a detailed understanding of the risk assessment process and the risks associated with the task.	The candidate showed a comprehensive understanding of the risk assessment process and risks associated with the task covering personal, environmental and bystanders.
2	Select and use the correct personal protective equipment	Apprentice selected and used appropriate PPE required for the task, according to the risk assessment/ site requirements.		
3	Identify the procedures that are required to carry out the task	Apprentice identified the correct procedures to carry out the task using the appropriate information		
4	Select the correct equipment and use in an appropriate manner	Apprentice selected the basic equipment for the task and used in an appropriate manner	Apprentice selected a comprehensive range of equipment for the task and used in an appropriate manner. Working in an ordered logical way employing industry best practice.	

5	Remove and inspect the cutting device on a machine	The apprentice used basic practices to remove the cutting device from the machine and was able to give a basic description of the condition of the cutting device.	The Apprentice used detailed practices to remove the cutting device from the machine, ensured no stored energy was in the machine and was able to give a detailed description of the condition of the cutting device	The apprentice used comprehensive practices to remove the cutting device from the machine, ensured no stored energy was in the machine. Made further check to ensure machine could not rotate during process. Thoroughly inspected the cutting device and was able to identify accurately the condition. Laid out all parts in a logical order
6	Sharpen the cutting device	The apprentice sharpened the cutting device to a basic standard and made no further checks	The apprentice sharpened the cutting device to a high standard and the finish was to a high standard, the sharpening was carried out to a detailed standard using the most appropriate tools	The apprentice sharpened the blade to a very high standard with an excellent finish using the most appropriate tools and checked that the sharpening would not affect the balance of the machine when re-installed
7	Replace the cutting device on the machine	The apprentice installed the cutting device back onto the machine to a basic standard	The apprentice installed the device back onto the machine taking care to ensure the cutting device was seated and installed correctly and ensured the machine could not rotate during the process	The apprentice installed the device back onto the machine taking care to ensure the cutting device was seated and installed correctly and ensured the machine could not rotate during the process. The apprentice made all the necessary checks to ensure the machine would run with no balance issues and made final checks for clearance once set up

8	Restore work area and equipment to its pre-assessment state	The candidate cleaned the work area and tools and stored the equipment in a suitable location.	The candidate cleaned the work area and tools and stored the equipment in a suitable location and returned the work area to its pre-assessment state	
Q1	Why is it important to ensure cutting devices are balanced?	The apprentice was able to give basic reasons why cutting devices should be balanced. Possible answers • To ensure smooth running • Prevent vibration • Keep blades sharp • Produce even cut • Not overload machine Any other suitable answer	The apprentice was able to give detailed reasons why cutting devices should be balanced. Possible answers • To ensure smooth running • Prevent vibration • Keep blades sharp • Produce even cut • Not overload machine Any other suitable answer	The apprentice was able to give comprehensive reasons why cutting devices should be balanced. Possible answers • To ensure smooth running • Prevent vibration • Keep blades sharp • Produce even cut • Not overload machine Any other suitable answer
Q2	What different devices are fitted to cutting devices to provide protection to machines and how do these work?	The apprentice was only able to identify basic protection devices and basic explanations to how these worked	The apprentice was able to identify a range of protection devices and gave detailed explanations how these worked	The apprentice was only able to identify a range of protection devices and gave comprehensive explanations how these worked

Assessment feedback form

Apprentice name

Apprentice number

IEPA name

Date of assessment

Task	Feedback

I confirm that this assessment has been completed to the required standard and meets the

Date of final assessment decision

Assessment grade

requirements for validity, currency, authenticity and sufficiency.

IEPA signature and date:

Assessment 700/750, 702/752, 704/754, 706/756, 708/758
Practical Observation

Task 14 - Check and adjust track tension

Task instructions for independent end-point assessors

Before starting the task the apprentice is required to provide a verbal risk assessment which will form part of the assessment.

Apprentices are required to

- Check the track tension of a track driven machine against manufactures specification and adjust to specification using the manufacturer's recommended procedures.
- To complete a report on the findings and the actions taken

The assessment ends when all equipment is packed away.

Apprentice to be provided with relevant machine, and the manufacturer's documentation appropriate to the task and test result recording form by centre.

The machine that is used for the assessment should be appropriate for the time allocated.

The centre will provide you and the apprentice with any site and task specific requirements including a risk assessment.

The models answers given for oral questions are not an exhaustive list, if applicable other suitable answers may be accepted.

<u>Machine condition:</u>

The machine used must have mal adjusted track tension. The machine should be parked with the parking brake applied.

<u>Guidance:</u>
If the engine is to be started the apprentice must check with the assessor first.
No road test is required in this task

Time for assessment: 1 hour 45 minutes.

Task is achieved at Pass/ Merit/ Distinction/ Fail

Task instructions for centres / end-point assessment customers

Before starting the task the apprentice is required to provide a verbal risk assessment which will form part of the assessment.

- Check the track tension of a track driven machine against manufactures specification and adjust to specification using the manufacturer's recommended procedures.
- To complete a report on the findings and the actions taken

The assessment ends when all equipment is packed away.

As the centre or employer you will provide the assessor and the apprentice with any site and task - specific requirements including a risk assessment, the manufacturer's documentation appropriate to the task together with a test result recording form.

<u>Machine condition:</u>

The machine used must have mal adjusted track tension. The machine should be parked with the parking brake applied.

The machine that is used for the assessment should be appropriate for the time allocated.

No road test is required in this task

Time for assessment: 1 hour 45 minutes.

Task is achieved at Pass/ Merit/ Distinction/ Fail

Task instructions for apprentices

Before starting the task you are required to provide a verbal risk assessment which will form part of the assessment.

You are required to

- Check the track tension of a track driven machine against manufactures specification and adjust to specification using the manufacturer's recommended procedures.
- To complete a report on the findings and the actions taken

The assessment ends when all equipment is packed away.

You will be provided with any site and task -specific requirements including a risk assessment, the manufacturer's documentation appropriate to the task together with a test result recording form.

You will be provided with relevant machine, test specifications and test result recording form by centre.

The machine that is used for the assessment should be appropriate for the time allocated.

<u>Guidance:</u>
If the engine is to be started, you must check with the assessor first.

No road test is required in this task

Time for assessment: 1 hour 45 minutes.

Task is achieved at Pass/ Merit/ Distinction/ Fail

Apprentice name:

Date:

Machine type for assessment:

Apprentices are **not** permitted to use the checklist to work from when completing the practical tasks.

All criteria must be achieved and the criteria indicated can be awarded marks based on the descriptors in the table.

Activity number and description	Mark awarded		
	1	**2**	**3**
1. Provide a verbal risk assessment for the task.			
2. Select and use appropriate personal protective equipment			
3. Identify the procedures that are required to carry out the task			
4. Select the correct equipment for the task and use in an appropriate manner			
5. Check the track tension prior to adjustment and adjust using manufacturer's procedures			
6. Complete a report on the findings and the actions taken			
7. Restore work area and equipment to its per-assessment state, leaving the machine in a safe parked condition.			
Q1 – What is the effect of a tight track?			
Q2 – What is the effect of a loose track?			
Total	/21		
Grade			
Apprentice signature and date			
Independent Assessor signature and date			

Converting marks to grades	
Grade	**Mark ranges**
Distinction	90% = 19
Merit =	75% = 16
Pass	65% = 12

The marks for each activity should be totalled and the conversion chart used to determine the grade for each task.

Practical observation descriptor table

Task 14 – Check and Adjust Track tension

		Grading descriptors		
Graded activity number and description from check list		**1 Mark**	**2 Marks**	**3 Marks**
1	Assess the risks associated with the site and the task and follow an approved task risk assessment and complete a pre-task / provide a verbal risk assessment.	The apprentice showed a limited understanding of the risk assessment process.	The apprentice showed a detailed understanding of the risk assessment process.	The apprentice showed comprehensive understanding of the risk assessment process.
2	Select and use appropriate personal protective equipment	The apprentice selected and used all PPE required correctly.		
3	Obtained manufacturer procedure to carry out the task and specification for the checks and adjustments being conducted.	The apprentice selected a generic working procedure to undertake the operation.	The apprentice selected the manufacturer's procedure to undertake the operation and completed this in a timely manner	The apprentice selected the manufacturer's procedure to undertake the operation and completed this in an effective and efficient manner
4	Selected the correct equipment for the task and used in an appropriate manner	Apprentice selected and used appropriate equipment required for the task, according to the manufacturer's procedures.		
5	Check the track tension prior to adjustment and adjust using manufacturer's procedures	Apprentice displayed a basic approach to identifying the track tension required and adjusting the track to a value within the specified tolerance but did not follow the manufacturer's procedures	Apprentice displayed a detailed approach to identifying the track tension required and adjusted the track to a value within the specified tolerance Following manufacturer's procedures	Apprentice displayed a comprehensive approach to identifying the track tension required and adjusted the track to a value within the specified tolerance Following manufacturer's

				procedures. The condition of the track undercarriage components and their relationship to the track was observed
6	Complete a report on the findings and the actions taken.	Basic report produced showed track tension before and after adjustment.	Detailed report produced showed track tension before and after adjustment and noted condition of track.	Comprehensive report produced showed track tension before and after adjustment, noted track undercarriage condition
7	Restore work area and equipment to its per-assessment state, leaving the machine in a safe parked condition.	The apprentice gave the equipment, and the work area a basic clean/check and stored the equipment in a suitable location.	The apprentice cleaned/checked the equipment, machine and work area carefully on completion of task, stored the tools correctly. Machine was left safely parked	
Q1	What is the effect of a tight track?	Apprentice gave a basic response Answers include: • Reduce undercarriage life. • Tight track can drastically affect bushing life • Increased wear rate by as much as three times. • Tight track is listed frequently as a "cause" or "accelerator" of wear and structural problems for many components	Apprentice gave a detailed response. Answers include: • Reduce undercarriage life. • Tight track can drastically affect bushing life • Increased wear rate by as much as three times. • Tight track is listed frequently as a "cause" or "accelerator" of wear and structural problems for many components	
Q2	What is the effect of a loose track?	Apprentice gave a basic response.	Apprentice gave a detailed response. Answers include:	

		• Answer include: Wear on top areas of drive sprocket teeth • Wear on idler flange tops. • Noisy track operation • Reduced track life	• Wear on top areas of drive sprocket teeth • Wear on idler flange tops. • Noisy track operation • Reduced track life	

Assessment feedback form

Apprentice name

Apprentice number

IEPA name

Date of assessment

Task	Feedback

I confirm that this assessment has been completed to the required standard and meets the

Date of final assessment decision

Assessment grade

requirements for validity, currency, authenticity and sufficiency.

IEPA signature and date:

Assessment 700/750, 702/752, 704/754, 706/756, 708/758
Practical Observation

Task 15 - Dismantle, inspect and re-assemble a hydraulic cylinder

Task instructions for independent end-point assessors

Before starting the task the apprentice is required to provide a verbal risk assessment which will form part of the assessment.

Apprentices are required to;

- Dismantle a single or double acting hydraulic cylinder, identify the internal and external components and examine them for serviceability
- Then to produce a written report on the work carried out and their findings.
- Reassemble the hydraulic ram.

The assessment ends when all equipment is packed away.

Apprentice to be provided with relevant hydraulic cylinder, manufacturer's documentation and test specifications and test result recording form by centre.

The hydraulic cylinder that is used for the assessment should be appropriate for the time allocated.

The centre or employer will provide you and the apprentice with any site and task specific requirements including a risk assessment.

The models answers given for oral questions are not an exhaustive list, if applicable other suitable answers may be accepted.

Time: 1 hour 45 minutes

Task is achieved at Pass/ Merit/ Distinction/ Fail

Task instructions for centres / end-point assessment customers

Before starting the task the apprentice is required to provide a verbal risk assessment which will form part of the assessment.

The apprentice is required to;

- Dismantle a single or double acting hydraulic cylinder, identify the internal and external components and examine them for serviceability
- Then to produce a written report on the work carried out and their findings.
- Reassemble the hydraulic cylinder.

You will provide any site and task specific requirements including a risk assessment, relevant hydraulic cylinder, manufacturer's documentation and test specifications and a result recording form.

The hydraulic cylinder that is used for the assessment should be appropriate for the time allocated.

You are required to have available a selection of hydraulic cylinders (single or double acting), of approximately 20kg weight, spare seals and fixings etc. are to be on hand

The assessment ends when all equipment is packed away.

Time: 1 hour 45 minutes

Task is achieved at Pass/ Merit/ Distinction/ Fail

Task instructions for apprentices

Before starting the task you are required to provide a verbal risk assessment which will form part of the assessment.

The apprentice is required to;

- Dismantle a single or double acting hydraulic cylinder, identify the internal and external components and examine them for serviceability
- Then to produce a written report on the work carried out and their findings.
- Reassemble the hydraulic cylinder.

The assessment ends when all equipment is packed away.

The centre will provide you with any site and task specific requirements

The hydraulic cylinder that is used for the assessment should be appropriate for the time allocated.

Time: 1 hour 45 minutes

Task is achieved at Pass/ Merit/ Distinction/ Fail

Apprentice name:

Date:

Apprentices are **not** permitted to use the checklist to work from when completing the practical tasks.

All criteria must be achieved and the criteria indicated can be awarded marks based on the descriptors in the table.

Activity number and description	**Mark awarded**		
	1	**2**	**3**
1. Provide a verbal risk assessment for the task.			
2. Select and use correct personal protective equipment.			
3. Identify the procedures that are required to carry out the task			
4. Select the correct equipment for the task and use in an appropriate manner			
5. Undertaking of the hydraulic cylinder task appropriate for the type of cylinder given to be worked upon, along with task objectives.			
6. Produced a written report on the work carried out outlining findings			
7. Restore work area and equipment to its pre-assessment state.			
Q1 – Explain the step by step process for removing a hydraulic cylinder from a machine			
Q2 – Describe how to dispose of possible waste from the task			
Q3 - On a double acting hydraulic cylinder explain the difference between the effective area of the cylinder rod end and effective area of the head end			
Q4 – Give the reason why cylinder retraction time is faster than extension, based on the same given flow rate			
Total	/25		
Grade			
Apprentice signature and date			
Independent Assessor signature and date			

Converting marks to grades	
Grade	**Mark ranges**
Distinction	90% = 23
Merit	75% = 19
Pass	65% = 16

The marks for each activity should be totalled and the conversion chart used to determine the grade for each task.

Practical observation descriptor table

Task 15 – Dismantle, inspect and re-assemble a hydraulic cylinder

		Grading descriptors		
Graded activity number and description from check list		**1 Mark**	**2 Marks**	**3 Marks**
1	Assess the risks associated with the workshop/station and the proposed task.	Apprentice showed a limited understanding of the risk assessment process and risk associated with the task.	Apprentice showed a detailed understanding of the risk assessment process and risk associated with the task.	Apprentice showed a comprehensive understanding of the risk assessment process and risks associated with the task covering personal, environmental and bystander(s).
2	Select and use correct personal protective equipment	The apprentice selected and used all PPE required.		
3	Identify manufacturer's procedures for the task.	Apprentice identified the correct procedures to carry out the task using the appropriate information		.
4	Select the correct equipment, set up and use in an appropriate manner	Apprentice selected and used appropriate equipment required for the task, according to the manufacturer's procedures.	The apprentice selected all the appropriate tooling to strip the ram in the correct sequence securing the ram correctly to remove the end cap following manufactures instructions for the chosen ram.	The apprentice selected all the appropriate tooling to strip the ram in the correct sequence securing the ram correctly to remove the end cap following manufactures instructions for the chosen ram. Maintaining good industry practice. The apprentice selected the right tool for the task. The apprentice worked through the task methodically
5	Undertaking of the hydraulic ram task appropriate for the type of ram given to be worked upon, along with task objectives.	The apprentice completed the task to a basic standard and used appropriate manual handling techniques	The apprentice completed the task to a detailed standard and used appropriate manual handling techniques. Care was taken to ensure parts	The apprentice completed the task to a comprehensive standard and used appropriate manual handling techniques. Care was taken to ensure parts

			were cleaned and examined	were cleaned and examined All procedures followed, completed the task methodically removed all the appropriate parts and laid out in a clean environment.
6	Produced a written report on the work carried out outlining findings	Apprentice recorded the basic test results	Apprentice recorded detailed test results in an appropriate format.	Apprentice recorded comprehensive test results in an appropriate format and provided evidence of comparison with manufacturer's reference data.
7	Restore work area and equipment to its pre-assessment state.	The apprentice gave the equipment and work area a basic clean and stored the equipment in a suitable location.	The apprentice cleaned equipment and work area carefully on completion of task and stored it correctly. Checks were made to ensure it was ready for the next operational use.	
Q1	Explain the step by step process for removing a hydraulic cylinder from a machine.	Apprentice gave basic explanation . Possible answers • Machine parked safely • Release pressure from lines • Implements lowered to ground • Remove pipes as required • Support where needed • Remove pins and locking mechanism Any machine specific procedures.	Apprentice gave detailed explanation. Possible answers • Machine parked safely • Release pressure from lines • Implements lowered to ground • Remove pipes as required • Support where needed • Remove pins and locking mechanism Any machine specific procedures.	Apprentice gave comprehensive explanation. Possible answers • Machine parked safely • Release pressure from lines • Implements lowered to ground • Remove pipes as required • Support where needed • Remove pins and locking mechanism Any machine specific procedures.

Q2	Describe how to dispose of possible waste from the task.	Apprentice gave basic explanation. Place in allocated drain tins.	Apprentice gave detailed explanation Follow company policy and local legislations for waste disposal.	
Q3	On a double acting hydraulic ram, explain the difference between the effective area of the cylinder rod end and effective area of the head end.	The effective area of the cylinder rod end is smaller, because the effective area of the rod takes up space against the piston.	Could identify that with a balanced double acting hydraulic ram there is no difference and why this is the case.	
Q4	Give the reason why with a double acting hydraulic ram the retraction time is faster than extension, based on the same given flow rate.	The effective area of the rod end is smaller than the head end, because the rod takes up space the actual displacement of the rod end is smaller.	Could identify that with a balanced double acting hydraulic ram that the extension and retraction times are the same and why this is the case	

Assessment feedback form

Apprentice name

Apprentice number

IEPA name

Date of assessment

Task	Feedback

I confirm that this assessment has been completed to the required standard and meets the

Date of final assessment decision

Assessment grade

requirements for validity, currency, authenticity and sufficiency.

IEPA signature and date:

Assessment 700/750, 702/752, 704/754, 706/756, 708/758
Practical Observation

Task 16 - Wiring a low voltage, multi pin, plug and socket

Task instructions for independent end-point assessors

Before starting the task the apprentice is required to provide a verbal risk assessment which will form part of the assessment.

Apprentices are required to;

- Wire a low voltage multi pin plug and socket
- Test the operation of the plug when finished

The assessment ends when all equipment is packed away.

N.B. A 7 pin trailer plug and lighting board would be suitable for the assessment task or alternatively a suitable wiring loom with multi pin plugs

If a machine is to be used it should be appropriate for the task time allocated.

The centre will provide the assessor and the apprentice with any site and task specific requirements including a risk assessment.

The model answers given to the questions are not exhaustive and any other correct answers may be accepted.

Time: 1hour 45 minutes

This task can be achieved at Pass, Merit and Distinction.

Task instructions for centres / end-point assessment customers

Before starting the task the apprentice is required to provide a verbal risk assessment which will form part of the assessment.

Apprentices are required to;

- Wire a low voltage multi pin plug and socket
- Test the operation of the plug and socket when finished

N.B. A 7 pin trailer plug and lighting board would be suitable for the assessment task and if this is the case the centre is to supply a means of testing the operation of the both the socket and plug

Alternatively a suitable wiring loom with multi pin plugs may be used at the discretion of the assessment centre / employer

If a machine is to be used it should be appropriate for the task time allocated.

You will provide you and the apprentice with any tools and resources needed to complete the task.

You will provide the assessor and the apprentice with any site and task specific requirements including a risk assessment. To include the appropriate wiring diagram to enable the task to be carried out

Time: 1 hour 45 minutes

This task can be achieved at Pass, Merit and Distinction.

Task instructions for apprentices

Before starting the task you are required to provide a verbal risk assessment which will form part of the assessment.

You are required to;

- Wire a low voltage multi pin plug and socket
- Test the operation of the plug when finished

The assessment ends when all equipment is packed away.

N.B. A 7 pin trailer plug and lighting board may be used for this assessment task and if this is the case the centre is to supply a means of testing the operation of the both the socket and plug
Alternatively a suitable wiring loom with multi pin plugs may be used at the discretion of the assessment centre

If a machine is to be used it should be appropriate for the task time allocated.

The centre will provide you and the assessor with any site and task specific requirements including a risk assessment.

Time: 1 hour 45 minutes

This task can be achieved at Pass, Merit and Distinction

Apprentice name:

Date:

Plug and socket type for assessment:

Apprentices are **not** permitted to use the checklist to work from when completing the practical tasks. The wiring diagram can be used

All criteria must be achieved and the criteria indicated can be awarded marks based on the descriptors in the table.

Activity number and description	Mark awarded		
	1	**2**	**3**
1. Provide a verbal risk assessment for the task.			
2. Select and use the correct personal protective equipment.			
3. Identify the procedures that are required to carry out the task			
4. Select the correct equipment for the task and used use in an appropriate manner			
5. Prepares the wiring harness / cable to be connected to the plug and socket			
6. Correctly wires the plug and socket			
7. Tests the operation of the plug when finished			
8. Restore work area and equipment to its pre-assessment state			
Q1 – How can you calculate the current carried by a wire in a lighting circuit?			
Q2 - Why is it important that there are no stray strands of wire in the plug and socket			
Q3 – What is the advice you should give to an operator who is using a defective lighting board			
Total	/25		
Grade			
Apprentice signature and date			
Independent Assessor signature and date			

Converting marks to grades	
Grade	**Mark ranges**
Distinction	90% = 23
Merit =	75% = 19
Pass	65% = 16

The marks for each activity should be totalled and the conversion chart used to determine the grade for each task.

Practical observation descriptor table

Task 16– Wiring a low voltage, multi pin, plug and socket

		Grading descriptors		
Graded activity number and description from check list		**1 Mark**	**2 Marks**	**3 Marks**
1	Provide a verbal risk assessment for the task.	Apprentice showed a basic understanding of the risk assessment process and risks associated with task.	The candidate showed a detailed understanding of the risk assessment process and the risks associated with the task.	The candidate showed a comprehensive understanding of the risk assessment process and the risks associated with the task covering personal, environmental and bystander(s).
2	Select and use the correct personal protective equipment.	Apprentice selected and used appropriate PPE required for the task, according to the risk assessment/ site requirements.		
3	Identify the procedures that are required to carry out the task	Apprentice identified basic procedures to carry out the task using the appropriate information	Apprentice identified detailed procedures to carry out the task using the appropriate information allowing a timely completion of the task	
4	Select the correct equipment for the task and used use in an appropriate manner	Selected basic equipment to complete the task used appropriately but not efficiently	Selected correct equipment to complete the task and used appropriately allowing good connections to be made	Selected comprehensive range of equipment used appropriately to complete the task efficiently, allowing good connections to be made and the task to be completed in a timely manner
5	Prepares the wiring harness / cable to be connected to the plug and socket	Basic preparation to wiring harness / cable. Takes a long time to complete task	Detailed preparation to wiring harness / cable. Outer sheath cut neatly without damage to wires, wires	Comprehensive preparation to wiring harness / cable. Absolutely no damage to wires, wire length from harness / cable

			stripped to give even exposed core length to enable good connection to terminals.	to plug terminal perfectly judged. Even exposed core length to enable good connection to terminals. Completed harness / cable preparation in an efficient effective way
6	Correctly wires the plug and socket	Plug and socket wired correctly but to a basic standard. Visually looks untidy.	Plug and socket wired correctly to a good standard. Wire lengths to terminals well judged. Stripped wires to an appropriate length to allow good connection	Plug and socket wired correctly to a good standard. Wire lengths to terminals well judged. Stripped wires to an appropriate length to allow good connection. Double checked that all connections and terminal pins were secure. If applicable ensured that all protective sleeves and grommets were in place to guard against water ingress Task completed in an effective and efficient manner
7	Tests the operation of the plug when finished	Carries out basic tests to confirm the correct operation Discovers fault which is rectified within the task time	Carries out detailed test both continuity and pairing of wires through the correct pin numbers Refers to wiring diagram	Carries out comprehensive tests, both continuity and pairing of wires through the correct pin numbers Refers to wiring diagram, checks terminal pin security in the plug sockets and ensures the integrity of the plug
8	Restore work area and equipment to its pre-assessment state	The apprentice cleaned the work area and tools and stored the equipment in a suitable location.	The apprentice cleaned the work area and tools and stored the equipment in a suitable location and returned the work area to its	

			pre-assessment state	
Q1	How can you calculate the current carried by a wire in a lighting circuit?	Basic answer with knowledge that the more bulbs you have in the circuit, the greater the load will be. Cannot explain how to calculate the current	Detailed knowledge that the more bulbs you have in the circuit, the greater the load will be and can add up the load and calculates the answer	
Q2	Why is it important that there are no stray strands of wire in the plug and socket?	Basic explanation given that the circuit could blow a fuse	Detailed Knowledge that the circuit could short circuit and blow a fuse and the reasons for it. Possibility of connection becoming warm Knowledge also that other lights in the circuit could be lit when not wanted	
Q3	What is the advice you should give to an operator who is using a defective lighting board?	Not to use it		

Assessment feedback form

Apprentice name

Apprentice number

IEPA name

Date of assessment

Task	Feedback

I confirm that this assessment has been completed to the required standard and meets the

Date of final assessment decision

Assessment grade

requirements for validity, currency, authenticity and sufficiency.

IEPA signature and date:

Assessment 700/750, 702/752, 704/754, 706/756, 708/758
Practical Observation

Task 17 - Check alternator charging system

Task instructions for independent end-point assessors

Before starting the task the apprentice is required to provide a verbal risk assessment which will form part of the assessment.

Apprentices are required to;

- Check and establish the performance of a charging system fitted with an alternator
- To produce a written report on the condition of the charging system and its performance measured against manufacturer's technical reference data

The task is completed when all tools and equipment are cleared away

The machine that is used for the assessment should be appropriate for the time allocated and will be required to start and run to allow testing of the charging system

Apprentices are required to seek permission from the assessor before starting the machine

The centre or employer will provide the assessor and the apprentice with any site and task specific requirements including a risk assessment.

The model answers given to the questions are not exhaustive and any other correct answers may be accepted.

Time: 1 hour 45 minutes

This task is achieved at Pass, Merit and Distinction

Task instructions for centres / end-point assessment customers

Before starting the task the apprentice is required to provide a verbal risk assessment which will form part of the assessment.

Apprentices are required to;

- Check and establish the performance of a charging system fitted with an alternator
- To produce a written report on the condition of the charging system and its performance measured against manufacturer's technical reference data

The task is completed when all tools and equipment are cleared away

The machine that is used for the assessment should be appropriate for the time allocated and will be required to start and run to allow testing of the charging system

You will provide task specific tools and supporting materials including, machinery and equipment to include manufacturer's technical reference data and or repair manual and a report sheet for the task

You will provide the assessor and the apprentice with any site and task specific requirements including a risk assessment.

Time: 1 hour 45 minutes

This task is achieved at Pass, Merit and Distinction

Task instructions for apprentices

Before starting the task you are required to provide a verbal risk assessment which will form part of the assessment.

You are required to;

- Check and establish the performance of a charging system fitted with an alternator
- To produce a written report on the condition of the charging system and its performance measured against manufacturer's technical reference data

The task is completed when all tools and equipment are cleared away

The machine that is used for the assessment should be appropriate for the time allocated and will be required to start and run to allow testing of the charging system

You are required to seek permission from the assessor before starting the machine

You will provide the assessor and the apprentice with any site and task specific requirements including a risk assessment.

Time: 1 hour 45 minutes

This task is achieved at Pass, Merit and Distinction.

Apprentice name:
Date:

Apprentices are **not** permitted to use the checklist to work from when completing the practical tasks, but may familiarise themselves with it prior to the observation.

All criteria must be achieved and the criteria indicated can be awarded marks based on the descriptors in the table.

Activity number and description	Mark awarded		
	1	**2**	**3**
1. Provide a verbal risk assessment for the task.			
2. Select and use the correct personal protective equipment.			
3. Identify the procedures that are required to carry out the task			
4. Select the correct equipment for the task set up and use in an appropriate manner			
5. Check and establish the performance of a charging system fitted with an alternator			
6. To produce a written report on the condition of the charging system and its performance measured against manufacturer's technical reference data			
7. Restore machine, work area and equipment to its pre-assessment state			
Q1 – Define the term Volts			
Q2 – Define the term Ampere			
Q3 - What is a typical maximum charging regulated voltage?			
Q4 – Which battery terminal do you remove first when isolating system?			
Total	/22		
Grade			
Apprentice signature and date			
Independent Assessor signature and date			

Converting marks to grades	
Grade	**Mark ranges**
Distinction	90% = 20
Merit	75% = 17
Pass	60% = 14

The marks for each activity should be totalled and the conversion chart used to determine the grade for each task.

Practical observation descriptor table

Task 17 - Check alternator charging system

		Grading descriptors		
Graded activity number and description from check list		**1 Mark**	**2 Marks**	**3 Marks**
1	Provide a verbal risk assessment for the task	Apprentice showed a basic understanding of the risk assessment process and risks associated with task.	The candidate showed a detailed understanding of the risk assessment process and the risks associated with the task.	The candidate showed a comprehensive understanding of the risk assessment process and the risks associated with the task covering personal, environmental and bystander(s).
2	Select and use the correct personal protective equipment.	Apprentice selected and used appropriate PPE required for the task, according to the risk assessment / site requirements.		
3	Identify the procedures that are required to carry out the task	Apprentice identified the correct procedures to carry out the task using the appropriate information		
4	Select the correct equipment for the task set up and use in an appropriate manner	Apprentice selected and used appropriate equipment required for the task, and had a basic idea of how to set up and use	Apprentice selected the correct tools and equipment required for the task and showed detailed knowledge of how to set up and use in an appropriate manner.	Apprentice selected the correct tools and equipment required for the task and showed comprehensive knowledge of how to set up and use in an appropriate manner. Correct operation of the test equipment was checked
5	Check and establish the performance of a charging system fitted with an alternator	The apprentice carried out basic tests	The apprentice carried out detailed tests inspecting the machines charging system before testing	The apprentice carried out comprehensive tests inspecting the machines charging system components before testing, checked that the machine was safe to start and run. Checked

				and double checked readings taken
6	To produce a written report on the condition of the charging system and its performance measured against manufacturer's technical reference data.	A basic report was compiled There was basic evidence that the test results were compared to manufacturer's data	A detailed report was compiled findings were detailed together with clear and concise comments Evidence that the test results were compared to reference data	A comprehensive report was compiled findings were detailed together with clear and concise comments Evidence that the test results were compared to reference data Observations of charging system condition were recorded
7	Restore work area and equipment to its pre-assessment state	The apprentice gave the work area a basic clean and tools and stored the equipment in a suitable location.	The apprentice cleaned the work area and tools and stored the equipment in a suitable location and returned the work area to its pre-assessment state	The apprentice cleaned the work area comprehensively and stored the tools and equipment in a suitable location and returned the work area and machine to its pre-assessment state ensuring areas worked on had been left clean and tidy
Q1	Define the term Volts	Pressure in an electrical circuit		
Q2	Define the term Ampere	The apprentice gave a basic explanation Current flow in circuit	The apprentice gave a detailed explanation Current flow in circuit '1 amp unit of measurement of electrical current produced in a circuit by 1 volt	
Q3	What is a typical maximum charging regulated voltage in a 12 volt system?	14.5 – 14.7 volts		

Q4	Which battery terminal do you remove first when isolating system?	Earth		

Assessment feedback form

Apprentice name

Apprentice number

IEPA name

Date of assessment

Task	Feedback

I confirm that this assessment has been completed to the required standard and meets the

Date of final assessment decision

Assessment grade

requirements for validity, currency, authenticity and sufficiency.

IEPA signature and date:

Assessment 700/750, 702/752, 704/754, 706/756, 708/758
Practical Observation

Task 18 - Measure Worn Components

Task instructions for independent end-point assessors

Before starting the task the apprentice is required to provide a verbal risk assessment which will form part of the assessment.

Apprentices are required to;

- Inspect and measure worn component(s) and decide on their serviceability.
- Record their findings and conclusions on serviceability

The worn components that you are required to inspect and measure may be part of a sub assembly, machine or a single component

The apprentice and assessor will be provided with site and task specific requirements and access to a range of worn components to be used in the assessment together with the relevant reference / manufacturer's data and test result recording form by the centre.

The assessment ends when the components, equipment and work area are restored to their pre-assessment state.

The models answers given for oral questions are not an exhaustive list, if applicable other suitable answers may be accepted.

Time for assessment: 1 hour 45 minutes.

Task is achieved at Pass/ Merit/ Distinction/ Fail

Task instructions for centres / end-point assessment customers

Before starting the task the apprentice is required to provide a verbal risk assessment which will form part of the assessment.

Apprentices are required to;

- Inspect and measure worn component(s) and decide on their serviceability.
- Record their findings and conclusions on serviceability

The worn components that you are required to inspect and measure may be part of a sub assembly, machine or a single component

If a machine or sub-assembly is used then the centre or employer is required to prepare the item to ensure that task can be completed in the allocated time.

The apprentice and assessor are to be provided with site and task specific requirements and access to a range of worn components to be used in the assessment together with the relevant reference / manufacturer's data and test result recording form by the centre.

You are required to provide the assessor and the apprentice with any site and task specific requirements including a risk assessment.

The assessment ends when the machine, sub-assembly or components, equipment and work area are restored to their pre-assessment state.

Time for assessment: 1 hour 45 minutes.

Task is achieved at Pass/ Merit/ Distinction/ Fail

Task instructions for apprentices

Before starting the task you are required to provide a verbal risk assessment which will form part of the assessment.

You are required to:

- Inspect and measure worn component(s) and decide on their serviceability.
- Record their findings and conclusions on serviceability

You will be provided with a range of worn components to be used in the assessment together with the relevant reference / manufacturer's data and test result recording form by the centre.

The worn components that you are required to inspect and measure may be part of a sub assembly, machine or a single component

The centre will provide the assessor and you with any site and task specific requirements including a risk assessment.

Time for assessment: 1 hour 45 minutes.

Task is achieved at Pass/ Merit/ Distinction/ Fail

Apprentice name:

Date:
Machine type for assessment:

Apprentices are **not** permitted to use the checklist to work from when completing the practical tasks.

All criteria must be achieved and the criteria indicated can be awarded marks based on the descriptors in the table.

Activity number and description	**Mark awarded**		
	1	**2**	**3**
1. Provide a verbal risk assessment for the task			
2. Select and use the correct personal protective equipment.			
3. Identify the procedures and data that is required to carry out the task			
4. Select the appropriate tools and measuring equipment to identify the serviceability of a range of worn components.			
5. Measure the worn components.			
6. Record the findings and conclusions on component serviceability			
7. Restore machine, sub-assembly or component, work area and equipment to its per-assessment state			
Q1- An engine crankshaft requires measurement to establish if it is serviceable. Explain what measurements are to be taken and why they are needed			
Q2- What effect would badly worn soil engaging parts have on a machine?			
Total	/21		
Grade			
Apprentice signature and date			
Independent Assessor signature and date			

Converting marks to grades	
Grade	**Mark ranges**
Distinction	90% = 19
Merit =	75% = 16
Pass	65% = 14

The marks for each activity should be totalled and the conversion chart used to determine the grade for each task.

Practical observation descriptor table

Task 18– Measure Worn Components

		Grading descriptors		
Graded activity number and description from check list		**1 Mark**	**2 Marks**	**3 Marks**
1	Provide a verbal risk assessment for the task.	The Apprentice showed only a limited understanding of a risk assessment process and the risks associated with the task.	The Apprentice showed a detailed understanding of the risk assessment process and the risks associated with the task.	The Apprentice showed a comprehensive understanding of the risk assessment process and risks associated with the task covering personal, environmental and bystanders.
2	Select and use the correct personal protective equipment.	Apprentice selected and used appropriate PPE required for the task according to the risk assessment/site requirements.		
3	Identify the procedures and data that is required to carry out the task	The Apprentice identified the basic procedures and data required to carry out the task	The Apprentice identified detailed procedures and data required to carry out the task accurately	
4	Select the appropriate tools and measuring equipment to identify the serviceability of a range of worn components.	The Apprentice selected basic measuring equipment not wholly suitable to accurately identify the serviceability of a range of worn components.	The Apprentice selected measuring equipment to give the most accurate indication of serviceability of a range of worn components.	

5	Measure the worn components.	The Apprentice accurately measured the worn components.	The Apprentice measured the worn components accurately using the most appropriate measuring equipment.	The Apprentice measured the worn components accurately using the most appropriate measuring equipment and double checked the findings
6	Record the findings and conclusions on component serviceability	Apprentice recorded basic measurements and reached a serviceability conclusion	Apprentice recorded detailed measurements compared against manufacturer's data and reached a serviceability conclusion	Apprentice recorded comprehensive measurements in an appropriate format and reached a serviceability conclusion providing evidence of comparison with manufacturer's reference data.
7	Restore components, work area and tools to pre-assessment state.	The Apprentice restored work area to a basic standard and stored the equipment in a suitable location.	The Apprentice restored work area and tools to pre assessment state and stored the equipment in a suitable location.	
Q1	Q1-An engine crankshaft requires measurement to establish if it is serviceable Explain what measurements are to be taken and why they are needed	The Apprentice gave basic answer and showed a lack of awareness of the reasons for the measurements being taken. Possible answers. • Two Measurements taken at 90 degrees to one another across the journal	The Apprentice gave detailed answers and showed a full appreciation of why the measurements were necessary. Possible answers. • Two Measurements taken at 90 degrees to one another across the journal	

		• Measurements at either end of the journal. • Measurements are required to establish if the crankshaft is with repair tolerances • How much the crankshaft is to be ground • Whether the journal is oval or tapered	• Measurements at either end of the journal. • Measurements are required to establish if the crankshaft is with repair tolerances • How much the crankshaft is to be ground • Whether the journal is oval or tapered	
Q2	Q2 – What effect would badly worn soil engaging parts have on a machine?	Apprentice gave basic description covering: • Excessive wear to other parts of the machine. • Poor cultivation performance • Excessive power consumption • Excessive fuel usage • Reduced work output • Crop damage • Soil engaging parts are designed to protect other parts of the machine	Apprentice gave detailed description, covering: • Excessive wear to other parts of the machine. • Poor cultivation performance • Excessive power consumption • Excessive fuel usage • Reduced work output • Crop damage • Soil engaging parts are designed to protect other parts of the machine	

Assessment feedback form

Apprentice name

Apprentice number

IEPA name

Date of assessment

Task	Feedback

I confirm that this assessment has been completed to the required standard and meets the

Date of final assessment decision

Assessment grade

requirements for validity, currency, authenticity and sufficiency.

IEPA signature and date:

Assessment 700/750, 702/752, 704/754, 706/756, 708/758
Practical Observation

Task 19 - Prepare to carry out a manufacturers scheduled service

Task instructions for independent end-point assessors

Before starting the task the apprentice is expected to provide a verbal risk assessment which will form part of the assessment.

Apprentices are required to prepare to carry out a manufacturers scheduled service on a machine

- Compile a list of all the parts, oil types and quantities that they require to carry out the scheduled service specified by the assessor
- Record the list of parts and oils required to complete the service.
- Select the equipment required to carry out the service and place it near the machine in preparation to be used
- Write a job description of the tasks that they need to perform in line with the requirements of the workshop / operators manual.
- Carry out a walk round of the machine explaining how the service will be completed

The assessment ends when **with permission from the assessor** all tooling and equipment is packed away

The assessor in conjunction with the centre is to determine the particular scheduled service that the apprentice will undertake

The machine selected should match the time allocated to complete the task

A machine used for the task is to be prepared in advance of the assessment and be in a good clean presentable state

The centre will provide the assessor and the apprentice with any site and task specific requirements including a risk assessment. To include manufacturer's reference data, service schedules, parts lists

The model answers given to the questions are not exhaustive and any other correct answers may be accepted.

Time: 1 hour 45 minutes

Task is achieved at Pass/ Merit/ Distinction/ Fail

Task instructions for centres / end-point assessment customers

Before starting the task the apprentice is expected to provide a verbal risk assessment which will form part of the assessment.

Apprentices are required to prepare to carry out a manufacturers scheduled service on a machine

- Compile a list of all the parts, oil types and quantities that they require to carry out the scheduled service specified by the assessor
- Record the list of parts and oils required to complete the service.
- Select the equipment required to carry out the service and place them near the machine in preparation to be used
- Write a job description of the tasks that they need to perform in line with the requirements of the workshop / operators manual.
- Carry out a walk round of the machine explaining how the service will be completed

You will provide the assessor and the apprentice with any site and task specific requirements including a risk assessment, to include relevant manufacturer's reference data, service schedules, parts lists and report form or job card on which to record the parts and actions required to complete the service

The apprentice is **not** required to carry out the scheduled service

The machine selected should match the time allocated to complete the task

The assessor in conjunction with the centre is to determine the particular scheduled service that the apprentice will undertake

A machine used for the task is to be prepared in advance of the assessment and be in a good clean presentable state

Time: 1 hour 45 minutes

Task is achieved at Pass/ Merit/ Distinction/ Fail

Task instructions for apprentices

Before starting the task, you are expected to provide a verbal risk assessment, which will form part of the assessment.

You are required to prepare to carry out a manufacturers scheduled service on a machine:

- Compile a list of all the parts, oil types and quantities that they require to carry out the scheduled service specified by the assessor
- Record the list of parts and oils required to complete the service.
- Select the equipment required to carry out the service and place them near the machine in preparation to be used
- Write a job description of the tasks that they need to perform in line with the requirements of the workshop / operators manual.
- Carry out a walk round of the machine explaining how the service will be completed

The assessment ends when **with permission from the assessor** all tooling and equipment is packed away

You are **not** required to carry out the scheduled service.

The centre will provide the assessor and the apprentice with any site and task specific requirements including a risk assessment.

The centre will also relevant manufacturer's reference data, service schedules, parts lists and report form or job card on which to record the parts and actions required to complete the service

The machine selected should match the time allocated to complete the task

A machine used for the task is to be prepared in advance of the assessment and be in a good clean presentable state

The assessor in conjunction with the centre will determine the particular scheduled service that the apprentice will undertake

Time: 1 hour 45 minutes

Task is achieved at Pass/ Merit/ Distinction/ Fail

Apprentice name:

Date:

Apprentices are **not** permitted to use the checklist to work from when completing the practical tasks.

All criteria must be achieved and the criteria indicated can be awarded marks based on the descriptors in the table.

Activity number and description	Mark awarded		
	1	**2**	**3**
1. Provide a verbal risk assessment for the task.			
2. Select and use the correct personal protective equipment.			
3. Identify the procedures that are required to carry out the task			
4. Select the correct equipment for the task and use in appropriate manner			
5. Complete a list of all parts and oils required. Complete List of Tasks to be completed during Service.			
6. Carry out a walk round of the machine explaining how the service will be completed			
7. Carry out the work in a manner that minimises the risks to yourself and others and without incurring damage to the machine.			
8. Restore machine, work area and equipment is to pre-assessment state.			
Q1 – How should waste oil be disposed of?			
Q2 – Why is it necessary to change engine oil and filters at the correct interval?			
Total	/23		
Grade			
Apprentice signature and date			
Independent Assessor signature and date			

Converting marks to grades	
Grade	**Mark ranges**
Distinction	90% = 21
Merit =	75% = 17
Pass	65% = 15

The marks for each activity should be totalled and the conversion chart used to determine the grade for each task.

Practical observation descriptor table

Task 19 – Prepare to carry out a manufacturers scheduled service

		Grading descriptors		
Graded activity number and description from check list		**1 Mark**	**2 Marks**	**3 Marks**
1	Provide a verbal risk assessment for the task.	Apprentice showed a limited understanding of the risk assessment process and risks associated with task.	Apprentice showed a detailed understanding of the risk assessment process and risks associated with task.	Apprentice showed a comprehensive understanding of the risk assessment process and risks associated with task covering personal, environmental and bystander(s).
2	Select and use the correct personal protective equipment.	Apprentice selected and used appropriate PPE required for the task, according to the risk assessment/ site requirements.		
3	Identify the procedures that are required to carry out the task	Apprentice identified correct procedures to carry out the task using the appropriate manual		
4	Select the correct equipment for the task and use in appropriate manner	Apprentice selected the basic equipment required for the task, according to the manufacturer's procedures and placed the equipment near the machine in a haphazard way	Apprentice selected all the appropriate equipment required for the task, according to the manufacturer's procedures. And placed the equipment near the machine	Apprentice selected all the appropriate equipment required for the task, according to the manufacturer's procedures and laid the equipment out ready for use in an ordered logical fashion.
5	Complete a list of all parts and oils required. Complete List of Tasks to be completed during service.	A basic list of parts was compiled to enable the service to be carried out along with a basic list of tasks	A detailed list of parts was compiled which contained some allowance for sundry requirements A detailed list of tasks was completed covering all requirements	A comprehensive list of parts was compiled which accounted for every eventuality, including parts which may be needed. Allowance was made for sundry items and an margin for oil quantities was added

				A comprehensive list of tasks was completed
6	Carry out a walk round of the machine explaining how the service will be completed	A Basic explanation of the service was given	A detailed explanation of the service was given	A comprehensive description of the service was explained. The apprentice worked through the task methodically. The apprentice also was able to identify and talk about other advisory items they may have spotted.
7	Carry out the work in a manner that minimises the risks to yourself and others and without incurring damage to the machine.	Apprentice carried out the task in a manner that reduce risks and without damaging the machine or equipment.		
8	Restore machine, work area and equipment is to pre-assessment state.	The apprentice gave the equipment, machine and work area a basic clean/check and stored the equipment in a suitable location.	The apprentice cleaned/checked the equipment, machine and work area carefully on completion of test and stored it correctly. Checks were made to ensure it was ready for the next operational use. Machine was left complete clean and safely parked	
Q1	How should waste oil be disposed of?	Apprentice showed a limited understanding of how waste oils should be disposed of	Apprentice showed a detailed understanding of how waste oil should be disposed of.	Apprentice showed a comprehensive understanding of how waste oil should be disposed of considering the legal and environmental aspects
Q2	Why is it necessary to change engine oil and filters at the correct interval?	Apprentice showed a limited understanding of why it is necessary to change oil and filters at the correct intervals	Apprentice showed a detailed understanding of why it is necessary to change oil and filters at the correct intervals	Apprentice showed a comprehensive understanding of why it is necessary to change oil and filters at the correct intervals Oil undergoes continued thermal breakdown due to high operating

				temperature. When this occurs, the oil becomes less effective as a lubricant. Without a good and efficient lubricant, parts of the engine rub together and wear each other out. Oil also contains additives that have the ability to neutralize acids. Over time, these additives get depleted and cease to be effective. Oil can also absorb water, dust and combustion by-products and hold them in suspension. Eventually, the oil gets saturated with this and can't absorb any more. This remains in the engine and can cause corrosion.

Assessment feedback form

Apprentice name

Apprentice number

IEPA name

Date of assessment

Task	Feedback

I confirm that this assessment has been completed to the required standard and meets the

Date of final assessment decision

Assessment grade

requirements for validity, currency, authenticity and sufficiency.

IEPA signature and date:

Assessment 700/750, 702/752, 704/754, 706/756, 708/758
Practical Observation

Task 20 - Locate and rectify a wiring fault in an electrical circuit

Task instructions for independent end-point assessors

Before starting the task the apprentice is required to provide a verbal risk assessment which will form part of the assessment.

This assessment is to be set on either a starting circuit, lighting circuit or SI (Spark ignition) circuit and completed in accordance with manufacture recommendations

The apprentice is required to;

- Carry out tests to locate and rectify fault(s) in an electrical circuit
- Record findings and compare with manufacturer's reference data.

The introduction of faults to be located and rectified may be pre-prepared by the centre prior to the assessment or on the day in conjunction with the assessor.

Apprentice to be provided with relevant machine or rig, test specifications, wiring diagrams, appropriate manufacturers documentation and test result recording forms by centre.

The machine or rig that is used for the assessment should be appropriate for the time allocated.

The centre is to provide you and the apprentice with any site and task specific requirements including a risk assessment.

The model answers given for oral questions are not an exhaustive list, if applicable other suitable answers may be accepted.

Time for assessment: 1 hour 45 minutes.

Task is achieved at Pass/ Merit/ Distinction/ Fail

Task instructions for centres / end-point assessment customers

Before starting the task the apprentice is required to provide a verbal risk assessment which will form part of the assessment.

This assessment is to be set on either a starting circuit, lighting circuit or SI (Spark ignition) circuit

The apprentice is required to:

- Carry out tests to locate and rectify fault(s) in an electrical circuit
- Record findings and compare with manufacturer's reference data.

The introduction of faults to be located and rectified may be pre-prepared by the centre prior to the assessment or on the day in conjunction with the assessor.

Apprentice to be provided with relevant machine or rig, test specifications, wiring diagrams, appropriate manufacturers documentation and test result recording forms by centre.

The machine or rig that is used for the assessment should be appropriate for the time allocated.

You will provide the assessor and the apprentice with any site and task specific requirements including a risk assessment.

Time for assessment: 1 hour 45 minutes.

Task is achieved at Pass/ Merit/ Distinction/ Fail

Task instructions for apprentices

Before starting the task you are required to provide a verbal risk assessment which will form part of the assessment.

This assessment will be set on either a starting circuit, lighting circuit or SI (Spark ignition) circuit

You will be required to:

- Carry out tests to locate and rectify fault(s) in an electrical circuit
- Record findings and compare with manufacturer's reference data.

You will be provided with relevant machine, test specifications and test result recording form by centre.

The machine or rig that is used for the assessment should be appropriate for the time allocated.

The centre will provide you with any site and task specific requirements including a risk assessment.

Time for assessment: 1 hour 45 minutes.

Task is achieved at Pass/ Merit/ Distinction/ Fail

Apprentice name:

Date:
Machine type for assessment:

Candidates are **not** permitted to use the checklist to work from when completing the practical tasks.

All criteria must be achieved and the criteria indicated can be awarded marks based on the descriptors in the table.

Activity number and description	**Mark awarded**		
	1	**2**	**3**
1. Provide a verbal risk assessment for the task.			
2. Select and use the correct personal protective equipment.			
3. Identify the procedures that are required to carry out the task			
4. Select the correct equipment for the test, set up and use in an appropriate manner			
5. Read and interpret wiring diagrams and manufacturer's documentation			
6. Carry out the recommended fault finding activity as set by the assessor, 0n the starting, lighting or (SI) spark ignition circuit of the given machine or rig.			
7. Record findings and compare with manufacturer's reference data.			
8. Restore Machine, work area and equipment to pre-assessment state			
Q1. Why is it important to fit fuses of the correct value in an electric circuit?			
Q2 State what the definition of volts is in electric terms.			
Total	/22		
Grade			
Apprentice signature and date			
Independent Assessor signature and date			

Converting marks to grades	
Grade	**Mark ranges**
Distinction	90% = 20
Merit =	75% = 17
Pass	65% = 14

The marks for each activity should be totalled and the conversion chart used to determine the grade for each task.

Practical observation descriptor table

Task 20 – Locate and rectify a wiring fault in an electrical circuit

		Grading descriptors		
Graded activity number and description from check list		**1 Mark**	**2 Marks**	**3 Marks**
1	Assess the risks associated with the site and proposed activity.	The apprentice showed only a basic understanding of a risk assessment.	The apprentice showed a detailed understanding of the risk assessment process.	The apprentice showed a comprehensive knowledge and understanding of the risk assessment process
2	Select and used the correct personal protective equipment.	Apprentice selected and used appropriate PPE required for the task, according to the risk assessment/ site requirements.		
3	Identify the procedures that are required to carry out the task	Apprentice identified the correct procedures to carry out the task using the appropriate information		
4	Select the correct equipment for the test, set up and use in an appropriate manner	Apprentice selected and used appropriate equipment required for the task, according to the manufacturer's procedures.	Apprentice selected and used appropriate equipment required for the task, according to the manufacturer's procedures. Equipment connected and used taking precautions not to damage wiring circuit and cause short circuit	Apprentice selected and used appropriate equipment required for the task, according to the manufacturer's procedures. Equipment connected and used taking precautions not to damage wiring circuit and cause short circuit and showed awareness of equipment calibration

5	Read and interpret wiring diagrams and manufacturer's documentation	Apprentice showed a basic understanding of a wiring diagram and its symbols	Apprentice showed a detailed understanding of a wiring diagram and its symbols, could identify the correct wires involved with the circuit area being checked and their purpose	Apprentice showed a comprehensive understanding of a wiring diagram and its symbols, could identify the correct wires involved with the circuit area being checked and their purpose. Displayed timely logical practices and accurate diagnosis of fault
6	Carry out fault finding activity as set by the assessor, on a starting, lighting or (SI) spark ignition circuit of a given machine or rig.	The apprentice carried out the task to a basic standard but did not follow a logical approach	The apprentice carried out the task in a detailed way The faults being identified according to manufactures procedure	The apprentice carried out the task in a thorough comprehensive way. The faults being identified according to manufactures procedure and checked that the repair was effective
7	Record findings and compare with manufacturer's reference data.	Apprentice recorded the basic test results	Apprentice recorded detailed test results in an appropriate format.	Apprentice recorded comprehensive test results in an appropriate format and provided evidence of comparison with manufacturer's reference data.
8	Reinstate work area and equipment to pre-assessment state	The candidate cleaned the work area and tools and stored the equipment in a suitable location.	The candidate cleaned the work area and tools and stored the equipment in a suitable location and returned the work area to its pre-assessment state	
Q1	Q1. Why is it important to fit fuses of the correct value in	Apprentice provided a basic description covering:	Apprentice provided a detailed description covering:	

	an electric circuit?	• To reduce the risk of appliances been damaged. • To reduce the risk of damage to equipment and the risk of fire. •	• To reduce the risk of appliances been damaged. • To reduce the risk of damage to equipment and the risk of fire. •	
Q2	State what the definition of volts is in electric terms.	Answer – Volts is the measurement of electrical pressure		

Assessment feedback form

Apprentice name

Apprentice number

IEPA name

Date of assessment

Task	Feedback

I confirm that this assessment has been completed to the required standard and meets the

Date of final assessment decision

Assessment grade

requirements for validity, currency, authenticity and sufficiency.

IEPA signature and date:

Assessment 700/750, 702/752, 704/754, 706/756, 708/758
Practical Observation

Task 21 - Remove, inspect and re-build multi plate friction slip clutch

Task instructions for independent end-point assessors

Before starting the task the apprentice is required to provide a verbal risk assessment which will form part of the assessment.

Apprentices are required to;

- Remove a slip clutch assembly from a machine
- Dismantle slip clutch and advise assessor on condition
- Rebuild slip clutch assembly and set to manufacturers instructions
- Refit the assembly back onto the machine

The task is completed when all tools and equipment are cleared away

The machine that is used for the assessment should be appropriate for the time allocated, and be fitted with a multi-plate friction slip clutch

There is no requirement to run the machine during the assessment

The centre or employer will provide task specific tools and supporting materials including, machinery and equipment to include manufacturer's technical reference data and or repair manual.

The centre or employer will provide the assessor and the apprentice with any site and task specific requirements including a risk assessment.

The model answers given to the questions are not exhaustive and any other correct answers may be accepted.

Time: 1 hour 45 minutes

This task is achieved at Pass, Merit and Distinction

Task instructions for centres / end-point assessment customers

Before starting the task the apprentice is required to provide a verbal risk assessment which will form part of the assessment.

Apprentices are required to;

- Remove a slip clutch assembly from a machine
- Dismantle clutch and advise assessor on condition
- Rebuild slip clutch assembly and set to manufacturer's instructions
- Refit the assembly back onto the machine

The task is completed when all tools and equipment are cleared away

The machine that is used for the assessment should be appropriate for the time allocated and be fitted with a multi-plate friction slip clutch

There is no requirement to run the machine during the assessment

You will provide task specific tools and supporting materials including, machinery and equipment to include manufacturer's technical reference data and or repair manual.

You will provide the assessor and the apprentice with any site and task specific requirements including a risk assessment.

Time: 1 hour 45 minutes

This task is achieved at Pass, Merit and Distinction

Task instructions for apprentices

Before starting the task you are required to provide a verbal risk assessment which will form part of the assessment.

You are required to;

- Remove a slip clutch assembly from a machine
- Dismantle slip clutch and advise assessor on condition
- Rebuild slip clutch assembly and set to manufacturer's instructions
- Refit the assembly back onto the machine

The task is completed when all tools and equipment are cleared away

The machine that is used for the assessment should be appropriate for the time allocated and be fitted with a multi-plate friction slip clutch

There is no requirement to run the machine during the assessment

The centre or employer will provide task specific tools and supporting materials including, machinery and equipment to include manufacturer's technical reference data and or repair manual.

The centre or provider will provide you and the assessor with any site and task specific requirements including a risk assessment.

Time: 1 hour 45 minutes

This task is achieved at Pass, Merit and Distinction.

Apprentice name:

Date:

Machine used for assessment:

Apprentices are **not** permitted to use the checklist to work from when completing the practical tasks.

All criteria must be achieved and the criteria indicated can be awarded marks based on the descriptors in the table.

Activity number and description	**Mark awarded**		
	1	**2**	**3**
1. Provide a verbal risk assessment for the task.			
2. Select and use the correct personal protective equipment.			
3. Identify the procedures that are required to carry out the task			
4 Select the correct equipment for the task set up and use in an appropriate manner			
5 Remove a slip clutch assembly from a machine			
6 Dismantle slip clutch and advise assessor on condition			
7 Rebuild slip clutch assembly and set to manufacturer's instructions			
8 Refit the assembly back onto the machine			
9 Restore machine, work area and equipment to its pre-assessment state			
Q1 - Why is a slip clutch needed in a drive line?			
Q2 What other methods are there to protect a driveline from excess torque?			
Total	/27		
Grade			
Apprentice signature and date			
Independent Assessor signature and date			

Converting marks to grades	
Grade	**Mark ranges**
Distinction	90% = 24
Merit =	75% = 20
Pass	65% = 18

The marks for each activity should be totalled and the conversion chart used to determine the grade for each task.

Practical observation descriptor table

Task 21– Dismantle, inspect and rebuild a friction slip clutch

		Grading descriptors		
Graded activity number and description from check list		**1 Mark**	**2 Marks**	**3 Marks**
1	Provide a verbal risk assessment for the task.	Apprentice showed a limited understanding of the risk assessment process and risks associated with task.	Apprentice showed a detailed understanding of the risk assessment process and risks associated with task.	Apprentice showed a comprehensive understanding of the risk assessment process and risks associated with task covering personal, environmental and bystander(s). Aware that asbestos is a possibility in older systems
2	Select and use the correct personal protective equipment.	Apprentice selected and used appropriate PPE required for the task, according to the risk assessment / site requirements.		
3	Identify the procedures that are required to carry out the task	Apprentice identified the correct procedures to carry out the task using the appropriate information		
4	Select the correct equipment for the task set up and use in an appropriate manner	Apprentice selected and used appropriate equipment required for the task, and had a basic idea of how to set up and use	Apprentice selected the correct tools and equipment required for the task and showed detailed knowledge of how to set up	Apprentice selected the correct tools and equipment required for the task and showed comprehensive knowledge of how to set up and use in an appropriate manner
5	Remove a slip clutch assembly from a machine	Removes guards and removes the assembly from the machine	Removes guards and removes the assembly from the machine taking care not to damage the guards and consider the weight of the device	Machine locked or stored energy in the system is dissipated prior to the work on the slip clutch commencing Removes the assembly from the machine taking care not to damage the guards and consider the weight of the device

6	Dismantle slip clutch and advise assessor on condition	Dismantles the clutch and gives only basic description of findings	Dismantles the clutch and gives a detailed description of findings including all the components of the assembly	Dismantles the clutch and gives a comprehensive assessment of the condition of the clutch. Task is carried out methodically and all parts are laid out in a logical order. Is able to advise on condition of springs, friction plates and separator plates.
7	Rebuild slip clutch assembly and set to manufacturer's instructions	Reassembles the clutch in the correct order and sets the slipping torque to manufactures procedures.	Reassembles the clutch in the correct order and accurately sets the slipping torque to manufactures procedures in a methodical way	Reassembles the clutch in the correct order and accurately sets the slipping torque to manufactures procedure in a methodical way ensuring that the exact procedure is followed so not to damage internal components in the assembly.
8	Refit the assembly back onto the machine	Apprentice fits assembly back on the machine	Apprentice fits assembly back on the machine taking care not to damage the guards and consider the weight of the device	Machine locked or /stored energy in the system is dissipated prior to the work on the slip clutch commencing Fits the assembly to the machine taking care not to damage the guards and considers the weight of the device
9	Restore machine, work area and equipment to its pre-assessment state	The apprentice gave the work area a basic clean and tools and stored the equipment in a suitable location	The apprentice cleaned the work area and tools and stored the equipment in a suitable location and returned the work area to its pre-assessment state	
Q1	Why is a slip clutch needed in a drive line?	Basic Knowledge that drive lines will break due to excess torque	Detailed knowledge that drive lines will break due to excess torque which can be due to excess power input. Machine blockage and inertia	Comprehensive knowledge that drive lines will break due to excess torque which can be due to • excess power input. • Machine blockage • Inertia • Machine safety devices
Q2	What other methods are there to protect a driveline from excess torque?	Basic knowledge of other types and their uses	Detailed knowledge of other types to include • Shearbolt	Comprehensive knowledge of other types and their uses to include • Shearbolt

			• Audible warning • Belts	• Audible warning • Belts

Assessment feedback form

Apprentice name

Apprentice number

IEPA name

Date of assessment

Task	Feedback

I confirm that this assessment has been completed to the required standard and meets the

Date of final assessment decision

Assessment grade

requirements for validity, currency, authenticity and sufficiency.

IEPA signature and date:

Assessment 700/750, 702/752, 704/754, 706/756, 708/758
Practical Observation

Task 22 – Make an item

Task instructions for independent end-point assessors

Before starting the task the apprentice is required to provide a verbal risk assessment which will form part of the assessment.

Apprentices are required to make an item as per the attached diagram. The plate supplied will measure 100 x 100 x 6 mm pre-cut to size.

The exercise is to show the ability to mark out, drill and tap holes, to use a method of metal removal to produce the radii and to finish an item.

The assessment ends when all tools and equipment are packed away.

The centre will provide you and the apprentice with any site and task specific requirements including a risk assessment.

The model answers given to the questions are not exhaustive and any other correct answers may be accepted.

Time for assessment: 1 hour 45 minutes.

Task is achieved at Pass/ Merit/ Distinction/ Fail

Task instructions for centres / end-point assessment customers

Before starting the task the apprentice is required to provide a verbal risk assessment which will form part of the assessment.

Apprentices are required to make an item as per the diagram.

The exercise is to show the ability to mark out, drill and tap holes, to uses a method of metal removal to produce the radii and to finish an item.

The assessment ends when all tools and equipment are packed away.

The material to be supplied by the centre is a plate measuring 100 x 100 x 6 mm, pre-cut to size

You will provide the assessor and the apprentice with any site and task specific requirements including a risk assessment.

Time for assessment: 1 hour 45 minutes.

Task is achieved at Pass/ Merit/ Distinction/ Fail

Task instructions for apprentices

Before starting the task you are required to provide a verbal risk assessment which will form part of the assessment.

You are required to make an item as per the diagram. The plate required will be pre-cut to size.

The exercise is to show the ability to mark out, drill and tap holes, to uses a method of metal removal to produce the radii and to finish an item.

The assessment ends when all tools and equipment are packed away.

The model answers given to the questions are not exhaustive and any other correct answers may be accepted.

The centre will provide you and the assessor with any site-specific requirements.

Time for assessment: 1 hour 45 minutes.

Task is achieved at Pass/ Merit/ Distinction/ Fail

Blanking Plate

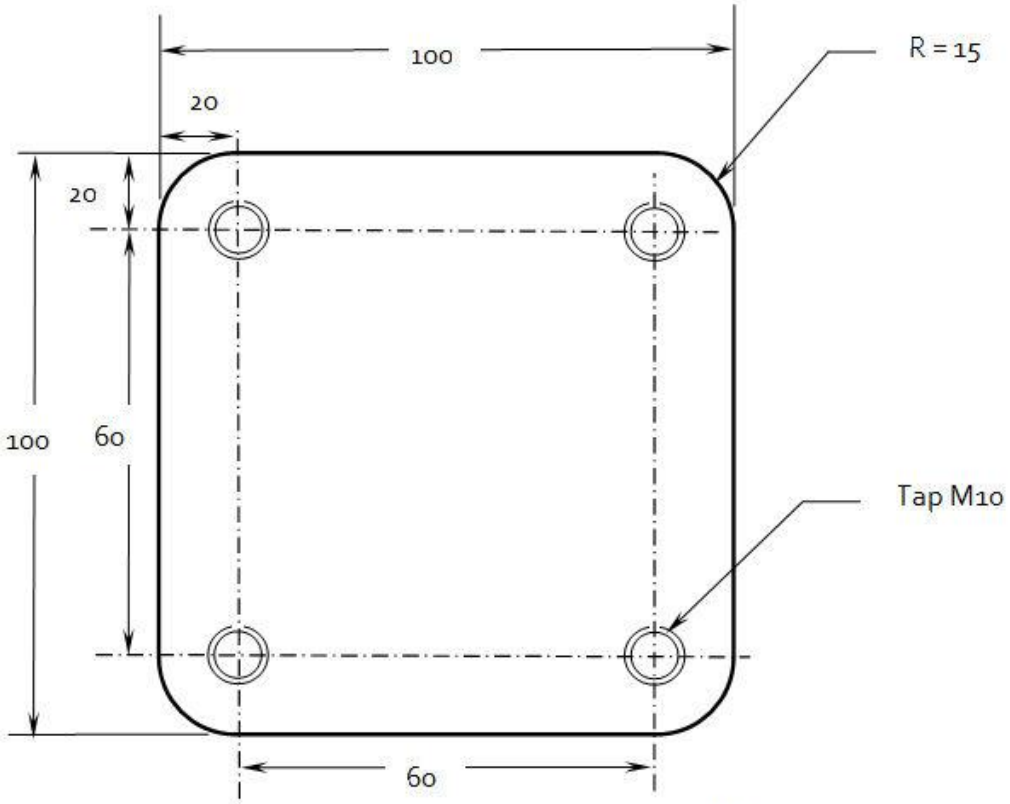

Notes

Drawing not to scale

All measurements in mm

Holes and Radii symmetrical

Plate thickness 6mm

Apprentice name:

Date:

Process used for the test:

Apprentices are **not** permitted to use the checklist to work from when completing the practical tasks.

All criteria must be achieved and the criteria indicated can be awarded marks based on the descriptors in the table.

Activity number and description	Mark awarded		
	1	**2**	**3**
1. Provide a verbal risk assessment for the task			
2. Select and use the correct personal protective equipment.			
3. Identify the procedures that are required to carry out the task			
4. Select the correct tools and equipment for the task and use in appropriate manner			
5. Accurately prepares and marks out the test piece			
6. Manufacturers the test piece in accordance with the diagram			
7. Restore work area, tools and equipment to its pre-assessment state			
Q1 - In the absence of a chart to give you the drilling speed in rev/min for a given drill size, can you suggest any way of determining the drilling speeds for a given size of drill?			
Q2 - Why is it important to take all measurements from a datum face when marking out an item			
Total	/17		
Grade			
Apprentice signature and date			
Independent Assessor signature and date			

Converting marks to grades	
Grade	**Mark ranges**
Distinction	90% = 15
Merit =	75% = 13
Pass	65% = 11

The marks for each activity should be totalled and the conversion chart used to determine the grade for each task.

Practical observation descriptor table

Task 22 – Make an Item

		Grading descriptors		
Graded activity number and description from check list		**1 Mark**	**2 Marks**	**3 Marks**
1	Provide a verbal risk assessment for the task.	Apprentice showed a basic understanding of the risk assessment process and risks associated with task.	Apprentice showed a detailed understanding of the risk assessment process and risks associated with task.	Apprentice showed a comprehensive understanding of the risk assessment process and risks associated with task covering personal, environmental and bystander(s).
2	Select and use the correct personal protective equipment.	Apprentice selected and used appropriate PPE required for the task, according to the risk assessment/ site requirements.		
3	Identify the procedures that are required to carry out the task	Apprentice identified the correct procedures to carry out the task using the appropriate information		
4	Select the correct tools and equipment for the task and use in appropriate manner	Selects equipment to do the task but makes some choices that are not best suited to the task	Selects the best equipment to do the task that will produce the best productivity and quality	
5	Accurately prepares and marks out the test piece	Basic marking out which is not entirely accurate due to good practice not being followed,	Good marking out which is reasonably accurate	Accurately and efficiently marks out the item to be made
6	Manufacturers the test piece in accordance with the diagram	Test piece made to basic standard	Test piece accurately made	Test piece accurately made and finished to a high standard using good engineering practices.
7	Restore work area, tools and equipment to its pre-assessment state	The apprentice gave the equipment and work area a basic clean/check	The apprentice cleaned/checked the equipment, machine and work	

			area carefully on completion of test and stored it correctly. Checks were made to ensure it was ready for the next operational use.	
Q1	In the absence of a chart to give you the drilling speed in rev/min for a given drill size, can you suggest any way determining the drilling speeds for a given size of drill?	Knowledge that small drills should rotate quickly and large drills slowly or any other suitable answer		
Q2	Why is it important to take all measurements from a datum face when marking out an item	To prevent cumulative error		

Assessment feedback form

Apprentice name

Apprentice number

IEPA name

Date of assessment

Task	Feedback

I confirm that this assessment has been completed to the required standard and meets the

Date of final assessment decision

Assessment grade

requirements for validity, currency, authenticity and sufficiency.

IEPA signature and date:

Assessment 700/750, 702/752, 704/754, 706/756, 708/758
Practical Observation

Task 23 - MIG/MAGS welding

Task instructions for independent end-point assessors

Before starting the task the apprentice is required to provide a verbal risk assessment which will form part of the assessment.

Apprentices are required to weld a lap and T Fillet joint with the MIG/MAGS process as per diagrams. The plate size to be used is 150mm x 50mm x 3mm. The plate to be pre-cut for the Apprentice. Each Apprentice will be given 4 pieces of the above plate plus scrap pieces to practice and allow for setting up the equipment.

The assessment ends when all the equipment is packed away

The welding equipment is expected to have the wire loaded into the machine although the apprentice is expected to set wire speed and gas flow

The equipment that is used for the assessment should be appropriate for the task

The centre will provide you and the apprentice with any site and task specific requirements including a risk assessment.

The models answers given for oral questions are not an exhaustive list, if applicable other suitable answers may be accepted.

Time for assessment: 1 hour 45 minutes.

Task is achieved at Pass/ Merit/ Distinction/ Fail

Task instructions for centres / end-point assessment customers

Before starting the task the apprentice is required to provide a verbal risk assessment which will form part of the assessment.

Apprentices are required to weld a lap and T Fillet joint with MIG/MAGS process as per diagrams. The plate size to be used is 150mm x 50mm x 3mm. The plate to be pre-cut for the Apprentice. Each Apprentice will be given 4 pieces of the above plate plus scrap pieces to practice and allow for setting up the equipment.

The assessment ends when all the equipment is packed away

The welding equipment is expected to have the wire loaded into the machine although the apprentice is expected to set wire speed and gas flow

The equipment that is used for the assessment should be appropriate for the task

You will provide the assessor and the apprentice with any site and task specific requirements including a risk assessment.

Time for assessment: 1 hour 45 minutes.

Task is achieved at Pass/ Merit/ Distinction/ Fail

Task instructions for apprentices

Before starting the task the apprentice is required to provide a verbal risk assessment which will form part of the assessment.

Apprentices are required to weld a lap and T Fillet joint with MIG/MAGS process as per diagrams. The plate size to be used is 150mm x 50mm x 3mm. The plate to be pre-cut for the Apprentice. Each Apprentice will be given 4 pieces of the above plate plus scrap pieces to practice and allow for setting up the equipment.

The assessment ends when all the equipment is packed away

The welding equipment is expected to have the wire loaded into the machine although the apprentice is expected to set wire speed and gas flow

The equipment supplied for the assessment should be appropriate for the task

The centre will provide you with any site and task specific requirements including a risk assessment.

Time for assessment: 1 hour 45 minutes.

Task is achieved at Pass/ Merit/ Distinction/ Fail

Welding test piece Lapp joint

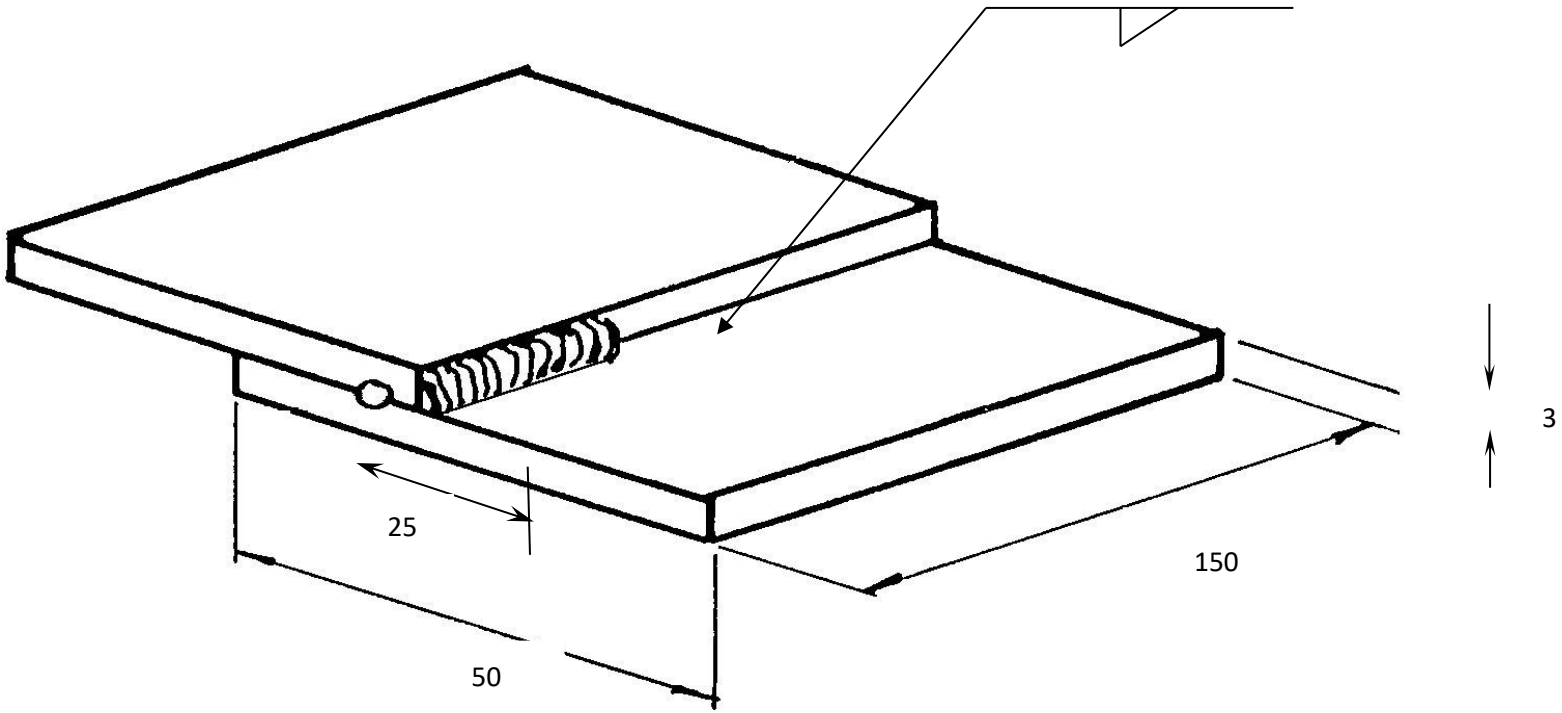

Notes

1) Material 150 x 50 x 3 ms plate
2) Lap to be 25mm. Test pieces can be held by magnets or clamps which must be removed after tacking
3) Test pieces to be tacked on the ends
5) All dimensions in mm
6) Drawing not to scale

Weld test piece T Fillet

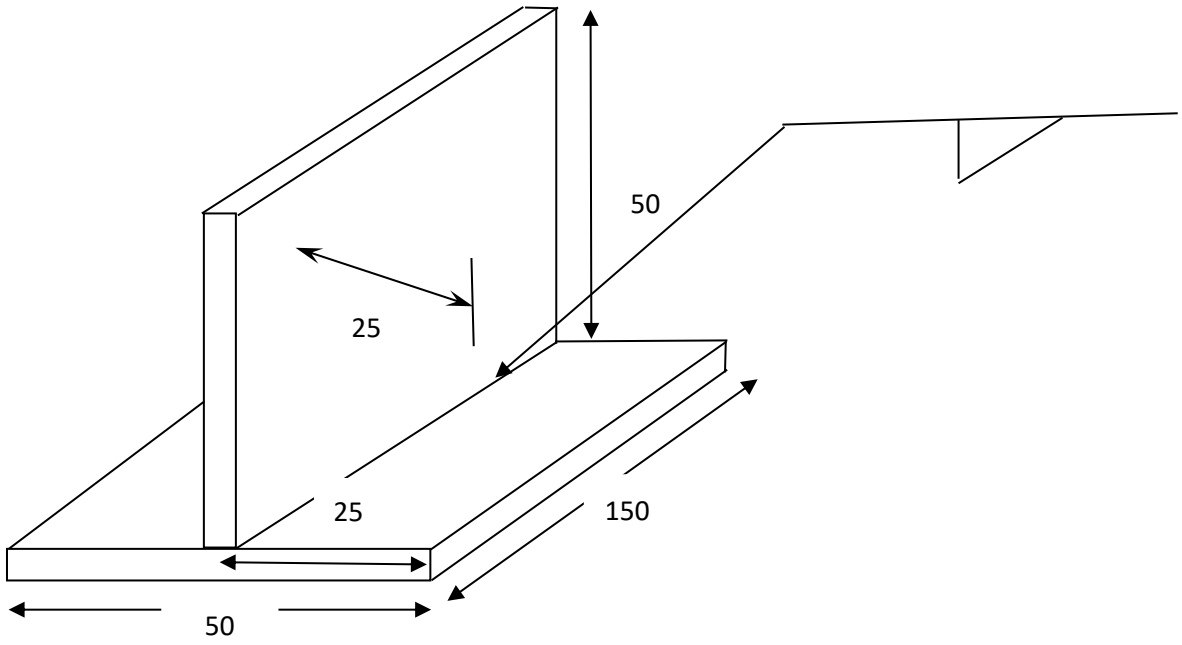

Notes

1) Material 150 x 50 x 3 ms plate
2) Lap to be 25mm. Test pieces can be held by magnets or clamps which must be removed after tacking
3) Test pieces to be tacked on the ends
5) All dimensions in mm
6) Drawing not to scale

Apprentice name:

Date:

Process used for the test:

Apprentices are **not** permitted to use the checklist to work from when completing the practical tasks.

All criteria must be achieved and the criteria indicated can be awarded marks based on the descriptors in the table.

Activity number and description	Mark awarded		
	1	**2**	**3**
1. Provide a verbal risk assessment for the task.			
2. Select and use the correct personal protective equipment.			.
3. Identify the procedures that are required to carry out the task			
4 Select the correct equipment for the task, set up and use in an appropriate manner			
5 Prepares and sets up the test pieces and tacks them together			
6 Welds the test pieces and presents them for inspection			
7 Restore work area and tools to pre-assessment state			
Q1 – What gasses can be used for the MIG/MAGS process			
Q2 - Where is it difficult to use the MIG/MAGS process			
Q3 - Why must a full face helmet with a dark visor be used with the MIG/MAG process			
Total	/21		
Grade			
Apprentice signature and date			
Independent Assessor signature and date			

Converting marks to grades	
Grade	**Mark ranges**
Distinction	90% = 19
Merit =	75% = 16
Pass	65% = 14

The marks for each activity should be totalled and the conversion chart used to determine the grade for each task.

Practical observation descriptor table

Task 23 – MIG/MAGS welding

		Grading descriptors		
Graded activity number and description from check list		**1 Mark**	**2 Marks**	**3 Marks**
1	Provide a verbal risk assessment for the task.	Apprentice showed a limited understanding of the risk assessment process and risks associated with task	Apprentice showed a detailed understanding of the risk assessment process and risks associated with task.	Apprentice showed a comprehensive understanding of the risk assessment process and risks associated with task covering personal, environmental and bystander(s).
2	Select and use the correct personal protective equipment.	Apprentice selected and used appropriate PPE required for the task, according to the risk assessment/ site requirements.		
3	Identify the procedures that are required to carry out the task	Apprentice identified the correct procedures to carry out the task using the appropriate information and equipment.		
4	Select the correct equipment, set up and use in an appropriate manner	Basic check of the equipment Shows only a basic understanding of the relationship between wire speed and volts and consequently weld intensity is such that a basic weld is produced. Set up not tested enough on scrap material and no practice done to ensure a good weld	Detailed check of the equipment Shows a detailed understanding of the relationship between wire speed and volts and consequently weld intensity is good. Set up tested well on scrap material and practice done to ensure a good weld	Comprehensive check of the equipment to include gas leakage, gun and contact tip, harness to gun, wire transport mechanism and mains plug and mains lead. Gas flow set accurately. Shows a comprehensive understanding of the relationship between wire speed and volts and consequently weld intensity is such that an excellent weld is produced. Set up well on scrap material and good practice done to

				ensure an excellent weld
5	Prepares and sets up the test pieces and tacks them together	Metal pieces set up accurately to the diagram.	Weld metal set up accurately to the diagram. All preparation of the metal required was done.	
6	Welds the test pieces and presents them for inspection	Welds test pieces to a basic standard Examination of the test piece show some of the following. • Welds fused well at toes • Even leg lengths • Welded full length of joint • No excessive build up of weld at start • No excessive crater at end • Slight concave profile to weld • No porosity in weld • Weld even along length • Test piece not distorted beyond acceptable limits • Undercutting to a depth of 0.5mm not to exceeding 10% of run	Welds test pieces to a good standard Examination of the test piece show most of the following. • Welds fused well at toes • Even leg lengths • Welded full length of joint • No excessive build up of weld at start • No excessive crater at end • Slight concave profile to weld • No porosity in weld • Weld even along length • Test piece not distorted beyond acceptable limits • Undercutting to a depth of 0.5mm not to exceeding 10% of run	Welds test pieces to an excellent standard. Examination of the test piece show a majority of the following. • Welds fused well at toes • Even leg lengths • Welded full length of joint • No excessive build up of weld at start • No excessive crater at end • Slight concave profile to weld • No porosity in weld • Weld even along length • Test piece not distorted beyond acceptable limits • Undercutting to a depth of 0.5mm not to exceeding 10% of run
7	Restore work area and tools to pre-assessment state.	Gas turned off at cylinder but gauges not de-loaded. Only	Gas turned off and gauges de-loaded. Gun and harness	

		basic clean of work area done.	left in a tidy condition. Work area cleaned and returned to its pre-assessment state	
Q1	What gasses can be used for the MIG/MAGS process	Basic knowledge about the gasses used for mild steel. Argon/CO_2, CO_2. Their relative advantages and disadvantages No knowledge of other gasses for Aluminium (Argon)	Detailed knowledge about the gasses used for mild steel. Argon/CO_2. CO_2 Their relative advantages and disadvantages. No knowledge of other gasses for Aluminium (Argon)	Comprehensive knowledge about the gasses used for mild steel. Argon/CO_2. CO_2 Their relative advantages and disadvantages. Knowledge of other gasses for Aluminium (Argon)
Q2	Where is it difficult to use the MIG/MAGS process	Basic knowledge that it cannot be used outside but no reason given why	Detailed knowledge that it cannot be used outside or in draughty conditions Reasons given why it cannot be used in these places.	
Q3	Why must a full face helmet with a dark visor be used with the MIG/MAG process	Knowledge about UV rays and how they can affect the skin on the face as well as the eyes		

Assessment feedback form

Apprentice name

Apprentice number

IEPA name

Date of assessment

Task	Feedback

I confirm that this assessment has been completed to the required standard and meets the

Date of final assessment decision

Assessment grade

requirements for validity, currency, authenticity and sufficiency.

IEPA signature and date:

Assessment 700/750, 702/752, 704/754, 706/756, 708/758

Practical Observation

Task 24 - Oxy-Fuel Cutting

Task instructions for independent end-point assessors

Before starting the task the apprentice is required to provide a verbal risk assessment which will form part of the assessment.

Apprentices are required to cut a shape with oxy-fuel cutting equipment as per diagram. The plate is to be pre-cut for the Apprentice. Each Apprentice will be given 1 piece of plate plus scrap pieces allow for setting up the equipment.

Centre to provide plate measuring 180 x 150 x 4 mm,

The assessment ends when all the equipment is packed away

The centre will provide you and the apprentice with any site and task specific requirements including a risk assessment.

The models answers given for oral questions are not an exhaustive list, if applicable other suitable answers may be accepted.

Time for assessment: 1 hour 45 minutes.

Task is achieved at Pass/ Merit/ Distinction/ Fail

Task instructions for centres / end-point assessment customers

Before starting the task the apprentice is required to provide a verbal risk assessment which will form part of the assessment.

Apprentices are required to cut a shape with oxy-fuel cutting equipment as per diagram. The plate is to be pre-cut for the Apprentice. Each Apprentice will be given 1 piece of plate plus scrap pieces to allow for setting up the equipment.

Centre to provide plate measuring 180 x 150 x 4 mm.

The assessment ends when all the equipment is packed away

You will provide the assessor and the apprentice with any site and task specific requirements including a risk assessment.

Time for assessment: 1 hour 45 minutes.

Task is achieved at Pass/ Merit/ Distinction/ Fail

Task instructions for apprentices

Before starting the task the apprentice is required to provide a verbal risk assessment which will form part of the assessment.

You are required to cut a shape with oxy-fuel cutting equipment as per diagram. The plate is to be pre-cut for you. You will be given 1 piece of plate plus scrap pieces to practice and allow for setting up the equipment.

Centre to provide plate measuring 180 x 150 x 4 mm,

The assessment ends when all the equipment is packed away

The centre will provide you and the assessor with any site and task specific requirements including a risk assessment.

Time for assessment: 1 hour 45 minutes.

Task is achieved at Pass/ Merit/ Distinction/ Fail

Cutting Exercise

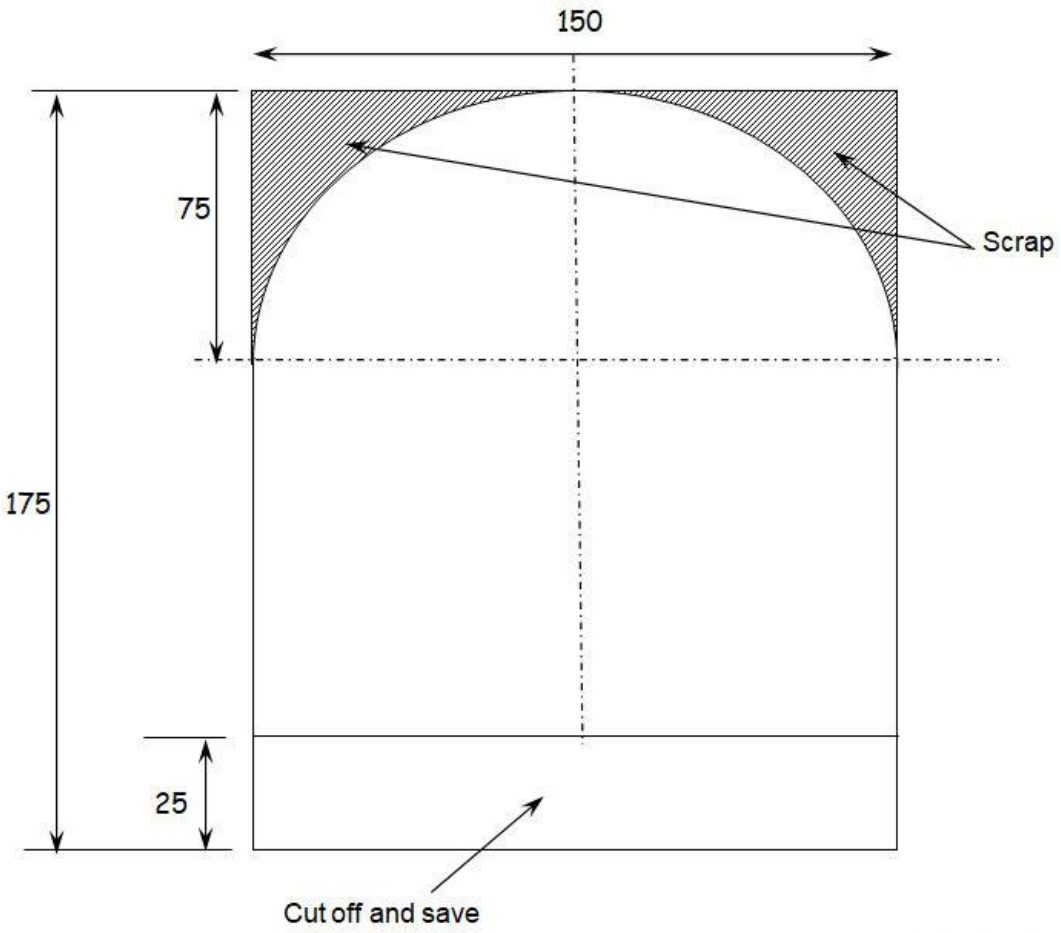

All dimensions in mm

Drawing not to scale

Cuts not to be dressed

Apprentice name:

Date:

Process used for the test:

Apprentices are **not** permitted to use the checklist to work from when completing the practical tasks.

All criteria must be achieved and the criteria indicated can be awarded marks based on the descriptors in the table.

Activity number and description	Mark awarded		
	1	**2**	**3**
1. Provide a verbal risk assessment for the task.			
2. Select and use the correct personal protective equipment			
3. Identify the procedures that are required to carry out the task			
4. Select the correct equipment for the test, set up and use in an appropriate manner			
5. Lights and sets flame.			
6. Prepares, marks and sets up the test piece for cutting			
7. Cuts the test piece and presents for inspection			
8. Leaves the equipment in a tidy and safe condition			
9. Leaves work area in a tidy condition			
Q1 What flame is used for the cutting and heating process and why is it important?			
Q2 What changes to the equipment should you make to cut thicker metal?			
Total	/24		
Grade			
Apprentice signature and date			
Independent Assessor signature and date			

Converting marks to grades	
Grade	**Mark ranges**
Distinction	90% = 22
Merit	75% = 18
Pass	65% = 16

The marks for each activity should be totalled and the conversion chart used to determine the grade for each task.

Practical observation descriptor table

Task 24 – Oxy-Fuel Cutting

		Grading descriptors		
Graded activity number and description from check list		**1 Mark**	**2 Marks**	**3 Marks**
1	Provide a verbal risk assessment for the task.	Apprentice showed a limited understanding of the risk assessment process and risks associated with task.	Apprentice showed a detailed understanding of the risk assessment process and risks associated with task.	Apprentice showed a comprehensive understanding of the risk assessment process and risks associated with task covering personal, environmental and bystander(s).
2	Select and use the correct personal protective equipment.	Apprentice selected and used appropriate PPE required for the task, according to the risk assessment/ site requirements.		
3	Identify the procedures that are required to carry out the task	Apprentice identified the correct procedures to carry out the task using the appropriate information		
4	Select the correct equipment for the task, set up and use in an appropriate manner	Basic selection and setup of equipment to allow the task to be completed.	Detailed selection and setup of equipment to allow the task to be accurately completed.	Comprehensive check of the equipment and set up of the equipment to allow the task to be completed to a high standard
5	Lights and sets flame.	Lights and sets heating flame but does not conduct test to confirm correct setting	Lights flame and sets heating flame accurately. Checks the straightness of the oxygen jet from nozzle and corrects as required. Produces test runs to check cutting	

6	Prepares, marks and sets up the test piece for cutting	Basic marking out The line to be cut is not highlighted accurately so cutting would be difficult	Detailed marking out. The line to be cut is highlighted accurately so cutting would be accurate.	Accurately marks out the shape to be cut. Uses centre punch to mark the line to be cut and possibly fill dots with French chalk. Carefully sets up the piece on the cutting table.
7	Cuts the test piece and presents for inspection	Cuts test piece to a basic standard. Examination of the test piece shows some of the following. • Cylinders and hoses clear of the dross falling from cut • Smooth cut • Cut to line ± 2mm • Cut edge square ± 5° • Little or no rounding of top edge of cut • No signs of loss of cut on underside of plate • Minimal dross • Dross removed easily before presentation	Cuts test piece to a good standard. Examination of the test piece shows most of the following. • Cylinders and hoses clear of the dross falling from cut • Smooth cut • Cut to line ± 2mm • Cut edge square ± 5° • Little or no rounding of top edge of cut • No signs of loss of cut on underside of plate • Minimal dross • Dross removed easily before presentation	Cut test piece produced to an excellent standard. Examinations of the test piece show the majority of the following. • Cylinders and hoses clear of the dross falling from cut • Smooth cut • Cut to line ± 2mm • Cut edge square ± 5° • Little or no rounding of top edge of cut • No signs of loss of cut on underside of plate • Minimal dross • Dross removed easily before presentation
8	Leaves the equipment in a tidy and safe condition	Leaves the equipment with some of the following • Gas turned off at cylinder but gauges not de-loaded. • Hoses and cutting torch stored appropriately • Pressure still in hoses	Leaves the equipment with most of the following done • Gas turned off at cylinder and gauges de-loaded. • Hoses and cutting torch stored appropriately	

			• Pressure removed from hoses. • Equipment left in pre-assessment state	
9	Restore work area to its pre-assessment state	Basic clean of work area.	Bench swept clean. Work area floor swept and any scrap etc removed to bin. Work area restored to pre assessment state	
Q1	What flame is used for the cutting and heating process and why is it important?	Basic Knowledge why the neutral flame is used but is unclear why	Detailed knowledge that neutral flame is used and explains that if an oxidising flame is used it will burn the metal being cut or heated	Comprehensive knowledge about the different flame types and the importance of setting the correct flame to prevent burning of the metal. Explains what burning of the metal is.
Q2	What changes to the equipment should you make to cut thicker metal?	Knowledge about changing the nozzle size and gas pressures		

Assessment feedback form

Apprentice name

Apprentice number

IEPA name

Date of assessment

Task	Feedback

I confirm that this assessment has been completed to the required standard and meets the

Date of final assessment decision

Assessment grade

requirements for validity, currency, authenticity and sufficiency.

IEPA signature and date:

Assessment 700/750, 702/752, 704/754, 706/756, 708/758
Practical Observation

Task 25 - MMA welding

Task instructions for independent end-point assessors

Before starting the task the apprentice is required to provide a verbal risk assessment which will form part of the assessment.

Apprentices are required to weld a lap and T Fillet joint with the MAA process as per diagrams. The plate size to be used is 150mm x 50mm x 6mm. The plate is to be pre-cut for the Apprentice. Each Apprentice will be given 4 pieces of the above plate plus scrap pieces to practice and allow for setting up the equipment.

The welding equipment is expected to be ready to use with the correct sized rods for the task although the apprentice will be expected to set the correct settings (amps) on the machine

The assessment ends when all the equipment is packed away

The centre will provide you and the apprentice with any site and task specific requirements including a risk assessment.

The model answers given to the oral questions are not an exhaustive list; if applicable other suitable answers may be accepted.

Time for assessment: 1 hour 45 minutes.

Task is achieved at Pass/ Merit/ Distinction/ Fail

Task instructions for centres / end-point assessment customers

Before starting the task the apprentice is required to provide a verbal risk assessment which will form part of the assessment.

Apprentices are required to weld a lap and T Fillet joint with the MAA process as per diagrams. The plate size to be used is 150mm x 50mm x 6mm. The plate is to be pre-cut for the Apprentice. Each Apprentice will be given 4 pieces of the above plate plus scrap pieces to practice and allow for setting up the equipment.

The welding equipment is expected to be ready to use with the correct sized rods for the task although the apprentice will be expected to set the correct settings (amps) on the machine

The assessment ends when all the equipment is packed away

You will provide the assessor and the apprentice with any site and task specific requirements including a risk assessment.

Time for assessment: 1 hour 45 minutes.

Task is achieved at Pass/ Merit/ Distinction/ Fail

Task instructions for apprentices

Before starting the task the apprentice is required to provide a verbal risk assessment which will form part of the assessment.

You are required to weld a lap and T Fillet joint with the MAA process as per diagrams. The plate size to be used is 150mm x 50mm x 6mm. The plate is to be pre-cut for you. You will be given 4 pieces of the above plate plus scrap pieces to practice and allow for setting up the equipment.

The welding equipment is expected to be ready to use with the correct sized rods for the task although the apprentice will be expected to set the correct settings (amps) on the machine.

The assessment ends when all the equipment is packed away

The centre will provide you with any site and task specific requirements including a risk assessment.

Time for assessment: 1 hour 45 minutes.

Task is achieved at Pass/ Merit/ Distinction/ Fail

Apprentice name:

Date:

Process used for the test:

Apprentices are **not** permitted to use the checklist to work from when completing the practical tasks.

All criteria must be achieved and the criteria indicated can be awarded marks based on the descriptors in the table.

Activity number and description	Mark awarded		
	1	**2**	**3**
1. Provide a verbal risk assessment for the task.			
2. Select and use the correct personal protective equipment			
3. Identify the procedures that are required to carry out the task			
4 Select the correct equipment for the task, set up and use in an appropriate manner			
5 Set up the test pieces and tack them together			
6 Welds the test pieces and presents them for inspection			
7 Restore work area, tools and equipment to pre-assessment state			
Q1 – What amps are typically used with different rod sizes?			
Q2 - Why should fume extraction be used when using the MMA process?			
Total	/19		
Grade			
Apprentice signature and date			
Independent Assessor signature and date			

Converting marks to grades	
Grade	**Mark ranges**
Distinction	90% = 17
Merit	75% = 14
Pass	65% = 12

The marks for each activity should be totalled and the conversion chart used to determine the grade for each task.

Practical observation descriptor table

Task 25– MMA welding

		Grading descriptors		
Graded activity number and description from check list		**1 Mark**	**2 Marks**	**3 Marks**
1	Provide a verbal risk assessment for the task.	Apprentice showed a limited understanding of the risk assessment process and risks associated with task	Apprentice showed a detailed understanding of the risk assessment process and risks associated with task.	Apprentice showed a comprehensive understanding of the risk assessment process and risks associated with task covering personal, environmental and bystander(s).
2	Select and use the correct personal protective equipment	Apprentice selected and used appropriate PPE required for the task, according to the risk assessment/ site requirements.		
3	Identify the procedures that are required to carry out the task	Apprentice identified the correct procedures to carry out the task using the appropriate information and equipment.		
4	Select the correct equipment for the task, set up and use in an appropriate manner	Basic check of the equipment. Shows only a basic understanding of the settings and relationship between rod size and amps	Detailed check of the equipment Shows a detailed understanding of settings and the relationship between rod size and amps. Used equipment in an appropriate manner.	Comprehensive check of the equipment Shows a comprehensive understanding of the settings and relationship between rod size and amps Uses equipment to full potential.
5	Sets up the test pieces and tacks them together	Metal pieces set up and tacked accurately to the diagram	Metal set up accurately and tacked to the diagram. All preparation of the metal required was done.	
6	Welds the test pieces and presents them for inspection	Welds test pieces to a basic standard Examination of the	Welds test pieces to a good standard	Welds test pieces to an excellent standard. Examination of the

		test pieces show some of the following. • Welds fused well at toes • Even leg lengths • Welded full length of joint • No excessive build up of weld at start • No excessive crater at end • Mitre or slight convex profile to weld • No porosity in weld • Weld even along length • Test piece not distorted more than 5° • Slag inclusions not excessive • Undercutting to a depth of 0.5mm not to exceeding 10% of run	Examination of the test pieces show most of the following. • Welds fused well at toes • Even leg lengths • Welded full length of joint • No excessive build up of weld at start • No excessive crater at end • Mitre or slight convex profile to weld • No porosity in weld • Weld even along length • Test piece not distorted more than 5° • No slag inclusions • Undercutting to a depth of 0.5mm not to exceeding 10% of run	test pieces show the majority of the following. • Welds fused well at toes • Even leg lengths • Welded full length of joint • No excessive build up of weld at start • No excessive crater at end • Slight concave profile to weld • No porosity in weld • Weld even along length • Test piece not distorted more than 5° • No slag inclusions • No undercutting
7	Restore work area, tools and equipment to pre-assessment state	The Apprentice cleaned the work area and tools.	The Apprentice Returned the work area to its pre-assessment state. Cleaned the tools and stored the equipment and PPE in a suitable location	
Q1	What amps are typically used with different electrode sizes?	Basic knowledge about relationship between the amp setting to electrode size.	Detailed knowledge about the relationship between amp setting to rod size. Knowledge of why	

			there is a range of amps given for each electrode size	
Q2	Why should fume extraction be used when using the MMA process?	Basic knowledge that the fumes contain harmful particles to the lungs	Detailed knowledge that the fumes contain harmful particles which if they get into the lungs can cause asthma, pneumonia, and cancer and metal fume fever. Also the fumes can contain metal particles such as zinc, chromium and nickel.	

Assessment feedback form

Apprentice name

Apprentice number

IEPA name

Date of assessment

Task	Feedback

I confirm that this assessment has been completed to the required standard and meets the

Date of final assessment decision

Assessment grade

requirements for validity, currency, authenticity and sufficiency.

IEPA signature and date:

Assessment 701/751, 703/753, 705/755, 707/757, 709/759 Professional Interview

Assessment specification

Component	Description	Coverage	Grading
701/751, 703/753, 705/755, 707/757, 709/759	The Professional Interview is an in depth discussion structured appropriately to draw out the best of the apprentice's energy, enthusiasm, competence and excellence. The interview is to be conducted by the Independent Assessment Organisation in controlled conditions affording an appropriate environment. The Professional Interview will be based on the Log of Progression described in the 'On programme requirements' section located in the Assessment Plan. Wherever possible the Independent Assessment Organisation assessor should be the same person who conducted the Practical Tasks EPA. The Independent Assessment Organisations appointed assessor has the casting vote on the outcome of the Professional Interview and grading awarded to the apprentice.	Skills: 4, 9 Knowledge: 1 – 3 Behaviours: 1, 3 – 5	P/M/D/X

Assessment 701/751, 703/753, 705/755, 707/757, 709/759
Professional Interview

Recording forms

All recording forms can be found in **Assessment pack recording form** document that is available in a word format. Please see below summary of the recording forms that are available for this assessment.

Recording form	Purpose	Who should complete	Where Can it be found
Assessment feedback form	IEPA records Apprentices performance for each task	IEPA	At the end of the task

Assessment 701/751, 703/753, 705/755, 707/757, 709/759
Professional Interview

Task instructions for independent end-point assessors

The Professional Interview is an in-depth discussion structured appropriately to draw out the best of the apprentice's energy, enthusiasm, competence and excellence.

The interview is to be conducted by the Independent Assessment Organisation (IAO) in controlled conditions affording an appropriate environment; either through physical attendance or by employing technology to enable a remote interview to be conducted

The Professional Interview will be based on the Log of Progression described in the 'On programme requirements' of the Apprenticeship Assessment Plan. It consists of verbal questioning to draw out the apprentices knowledge and understanding of the apprenticeship standards, their aspirations and the industry section they work within.

For the Professional Interview, the Independent End-point Assessor will be the same person that conducted the Practical Tasks EPA.

The Professional Interview is graded Pass/ Merit/ Distinction/ Fail.

Duration: 1 hour

Topics covered by the professional Interview from the standard:

Knowledge:

- How to comply with the Health and Safety at Work Act, Manual Handling regulations, The Abrasive Wheel Regulations and the legislation relevant to the role of Service Engineer
- The company staff handbook, the chain of command, workplace procedures e.g. daily time sheets, job cards, parts of requisitions processes, use of pre-delivery procedures and maintenance schedules
- How to record information, maintain accurate customer service records and communicate with customers and colleagues using verbal and handwritten methods whilst observing customer care practices

Skills:

- Access and interpret technical data related to service and maintenance operations in accordance with the manufacturer's documentation
- Communicate using a range of methods. This will include using giving oral and written reports to colleagues and customers regarding the work carried out on equipment

Behaviours:

- Safety orientation: a disciplined approach to compliance with Health and Safety guidance with a responsible attitude to risk regardless of the level of supervision. Risk adverse attitude to matters concerning the environment, property, personal safety and the safety of others
- Communicator: An open and honest communicator who recognises the need to use appropriate communication methods to express and receive information accurately in a timely positive and respectful manner
- Team player: can work on their own initiative but also interacts and communicates effectively within a team applying a respectful professional manner ad considering the implications of their own actions on other people and the business
- Willingness to learn: Can reflect on skills, knowledge and behaviours and seek opportunities to develop, adapt to different situations, environments or technologies and have a positive attitude to feedback and advice. Pays attention asks questions when supervisory instructions are not understood and recognises the limitation of personal responsibility

Sample questions for the Professional Discussion

This are not an exhaustive or compulsory list of questions, these should be adapted for the Apprentices evidence submitted.

Topic area	**Example question**
Behaviour: Willingness to learn	*Within the context of the apprenticeship standards what do you consider your strengths and weaknesses to be, and in the case for the weaknesses what action do you propose to take?*
Knowledge: Customer care	*Can you identify who your customers are and explain why customer care in important?*
Knowledge: Health and Safety Behaviours: Safety orientations	*How many items can you names that contain stored energy, which might present a hazard when servicing a machine or equipment?*
Behaviours: Willingness to learn	*What motivated you to become a service engineer and what aspirations do you have?*
Knowledge: How to record information	*Why is it important to have job cards and time sheets?*
Behaviour Team Player	*What does being a team player in the work environment mean to you and why is it important?*
Behaviour Communicator	*What in your opinion are the barriers to good communication?*
Skills Access and interpret technical data	*Explain the importance of referring to technical data, where the technical data required to carry out a scheduled service can be found and what actions to take if this information is not available*

Grading descriptor table

Fail	Pass	Merit	Distinction
The apprentice has: • Failed to communicate or caused confusion by using technical vocabulary inappropriate to the audience • Demonstrates no logical thought process when responding to questions raised within the professional interview • Cannot supply basic answers when asked questions in the interview based upon the standards • Displays little or no customer care awareness knowledge and skills • Cannot identify the limits of personal responsibility in their job role • Failed to demonstrate	The apprentice has: • Communicated a comprehensive overview of their own progression detailing the stages of development throughout the apprenticeship • Can answer questions using concise language to articulate the reply • Can identify the limits of personal responsibility in their job role and the actions to take in this situation • Can outline the principles of customer care • Can demonstrate their knowledge of Health & Safety compliance	Demonstrates all the pass criteria and in addition: • Can communicate a broad understanding of the principles, themes and technologies within the Service Engineer apprenticeship standard • Can explain why a random selection of behaviours listed in the standard are required • Displays a clear understanding of company procedures • Displays of positive attitude	Demonstrates all the merit criteria and in addition: • Presents a well thought out articulated reasoned discussion in the professional interview • Critically provides self-analysis of personal development throughout the apprenticeship process • Demonstrates clearly how they have learnt from the learning experience and has clear aspirations towards Continual Professional Development and career advancement • Demonstrates a deep understanding of the occupation, industry and the role played within the business

knowledge of safe working practices			

Task instructions for centres / end-point assessment customers

The Professional Interview is an in-depth discussion structured appropriately to draw out the best of the apprentice's energy, enthusiasm, competence and excellence.

The interview is to be conducted by the Independent Assessment Organisation (IAO) in controlled conditions affording an appropriate environment; either through physical attendance or by employing technology to enable a remote interview to be conducted

The Professional Interview will be based on the Log of Progression that the apprentice has produced as per the 'on programme requirements' of the apprenticeship standard. It consists of verbal questioning to draw out their knowledge and understanding of the apprenticeship standards, the industry sector that you work within and your aspirations.

For the Professional Interview, the Independent End-point Assessor will be the same person that conducted the Practical Tasks EPA.

The professional interview is graded Pass/ Merit/ Distinction/ Fail.

Duration: 1 hour

Topics covered by the professional Interview from the standard:

Knowledge:

- How to comply with the Health and Safety at Work Act, Manual Handling regulations, The Abrasive Wheel Regulations and the legislation relevant to the role of Service Engineer
- The company staff handbook, the chain of command, workplace procedures eg daily time sheets, job cards, parts of requisitions processes, use of pre-delivery procedures and maintenance schedules
- How to record information, maintain accurate customer service records and communicate with customers and colleagues using verbal and handwritten whilst observing customer care practices

Skills:

- Access and interpret technical data related to service and maintenance operations in accordance with the manufacturer's documentation

- Communicate using a range of methods. This will include using giving oral and written reports to colleagues and customers regarding the work carried out on equipment

Behaviours:

- Safety orientation: a disciplined approach to compliance with Health and Safety guidance with a responsible attitude to risk regardless of the level of supervision. Risk adverse attitude to matters concerning the environment, property, personal safety and the safety of others
- Communicator: An open and honest communicator who recognises the need to use appropriate communication methods to express and receive information accurately in a timely positive and respectful manner
- Team player: can work on their own initiative but also interacts and communicates effectively within a team applying a respectful professional manner ad considering the implications of their own actions on other people and the business
- Willingness to learn: Can reflect on skills, knowledge and behaviours and seek opportunities to develop, adapt to different situations, environments or technologies and have a positive attitude to feedback and advice. Pays attention asks questions when supervisory instructions are not understood and recognises the limitation of personal responsibility

Task instructions for apprentices

The Professional Interview is an in-depth discussion structured appropriately to draw out the best of your energy, enthusiasm, competence and excellence.

The interview is to be conducted by the Independent Assessment Organisation (IAO) in controlled conditions affording an appropriate environment; either through physical attendance or by employing technology to enable a remote interview to be conducted

The Professional Interview will be based on the Log of Progression that you have produced as per the 'on programme requirements' of the apprenticeship standard. It consists of verbal questioning to draw out your knowledge and understanding of the apprenticeship standards, the industry sector that you work within and your aspirations.

For the Professional Interview, the Independent End-point Assessor will be the same person that conducted the Practical Tasks EPA.

The professional interview is graded Pass/ Merit/ Distinction/ Fail.

Duration: 1 hour

Topics covered by the professional Interview from the standard:

Knowledge:

- How to comply with the Health and Safety at Work Act, Manual Handling regulations, The Abrasive Wheel Regulations and the legislation relevant to the role of Service Engineer
- The company staff handbook, the chain of command, workplace procedures eg daily time sheets, job cards, parts of requisitions processes, use of pre-delivery procedures and maintenance schedules
- How to record information, maintain accurate customer service records and communicate with customers and colleagues using verbal and handwritten whilst observing customer care practices

Skills:

- Access and interpret technical data related to service and maintenance operations in accordance with the manufacturer's documentation
- Communicate using a range of methods. This will include using giving oral and written reports to colleagues and customers regarding the work carried out on equipment

Behaviours:

- Safety orientation: a disciplined approach to compliance with Health and Safety guidance with a responsible attitude to risk regardless of the level of supervision. Risk adverse

attitude to matters concerning the environment, property, personal safety and the safety of others

- Communicator: An open and honest communicator who recognises the need to use appropriate communication methods to express and receive information accurately in a timely positive and respectful manner
- Team player: can work on their own initiative but also interacts and communicates effectively within a team applying a respectful professional manner ad considering the implications of their own actions on other people and the business
- Willingness to learn: Can reflect on skills, knowledge and behaviours and seek opportunities to develop, adapt to different situations, environments or technologies and have a positive attitude to feedback and advice. Pays attention asks questions when supervisory instructions are not understood and recognises the limitation of personal responsibility

Level 2 End-point Assessment for ST0242_03 Land-Based Service Engineer

Apprenticeship assessment results sheet

Grading Sheet for Practical Observation

Component	Task number	Task title	Grade Achieved	Points Awarded (Pass =1, Merit = 2, Distinction = 3)
700/750, 702/752, 704/754, 706/756, 708/758				
		Overall Grade for component Pass = 3 - 5 Merit = 6 – 7 Distinction = 8 – 9		

All tasks must be passed to allow a grade to be claimed.

Overall EPA grade

Component number	Assessment	Grade achieved	Points
201	Knowledge Test – Online	Pass / merit / distinction / fail	
	Practical Observation	Pass / merit / distinction / fail	
	Professional Interview	Pass / merit / distinction / fail	
		Total mark for all graded tasks	
		Overall grade (see conversion chart)	

Conversion chart	
Average mark	**Overall grade**
3 - 5	Pass
6 - 7	Merit
8 - 9	Distinction

All components must be passed to allow a grade to be claimed.

5 Appendices

End-Point Assessment Gateway Declaration Form

Please complete this form to confirm that all parties are satisfied that the apprentice has met the gateway requirements and can be put forward for end-point assessment (EPA) with City & Guilds.

Apprenticeship Standard		**Start date**	
Apprentice name		Enrolment number	

Entry Requirement	**Achieved (Yes/No)**
Level 1 Mathematics (working towards Level 2)	
Level 1 English (working towards Level 2)	

Providers must submit evidence of achievement to us for each gateway requirement. It is the provider's responsibility to keep auditable evidence of these requirements. Without appropriate evidence, we will not be able to complete your booking or carry out the EPA. Customers may still be charged.

Any previous End-Point Assessments	
Has the Apprentice previously taken any assessments that form part of the EPA for this Apprenticeship Standard with any other Assessment Organisation?	Yes/No
If yes	
What Assessment Organisation was the End-Point Assessment carried out by?	
What date(s) was the End-Point Assessment taken?	
What grade(s) (eg fail/pass/merit/distinction) was issued?	

Employer and provider declaration:

I confirm that the gateway meeting has been carried out to confirm that the apprentice:

1. **Has achieved all EPA gateway requirements as listed above and has the knowledge, skills and behaviours required by the apprenticeship standard and is eligible for EPA.**

2. **Has been employed throughout their apprenticeship.**

3. **Will have completed a minimum of 12 months and 1 day on-programme before the first EPA assessment with City & Guilds.**

Employer		**Date**	
Training Provider (if appropriate)		**Date**	

Apprentice declaration:

I confirm that I have gone through a gateway process to check that I am eligible for EPA.

I give City & Guilds permission to apply to the ESFA and the Institute for Apprenticeships for the apprenticeship certificate on my behalf when I complete EPA successfully.

Apprentice		**Date**	

Providers should submit the completed form to us through the EPA portal. Please refer to the **Manual for the End-Point Assessment Service** for details, including timeframes.

Useful contacts

Centres Exam entries, Certificates, Registrations/enrolment, Invoices, Missing or late exam materials, Nominal roll reports, Results	**E: centresupport@cityandguilds.com**
Learners General qualification information	**E: learnersupport@cityandguilds.com**
Other contacts For other contacts visit the Contact Us page of our website	**W: www.cityandguilds.com/help/contact-us**

About City & Guilds

As the UK's leading vocational education organisation, City & Guilds is leading the talent revolution by inspiring people to unlock their potential and develop their skills. We offer over 500 qualifications across 28 industries through 8500 centres worldwide and award around two million certificates every year. City & Guilds is recognised and respected by employers across the world as a sign of quality and exceptional training.

City & Guilds Group

The City & Guilds Group operates from three major hubs: London (servicing Europe, the Caribbean and Americas), Johannesburg (servicing Africa), and Singapore (servicing Asia, Australia and New Zealand). The Group also includes the Institute of Leadership & Management (management and leadership qualifications), City & Guilds Licence to Practice (land-based qualifications), the Centre for Skills Development (CSD works to improve the policy and practice of vocational education and training worldwide) and Learning Assistant (an online e-portfolio).

Copyright

The content of this document is, unless otherwise indicated, © The City and Guilds of London Institute and may not be copied, reproduced or distributed without prior written consent. However, approved City & Guilds centres and Apprentices studying for City & Guilds qualifications may photocopy this document free of charge and/or include a PDF version of it on centre intranets on the following conditions:

- centre staff may copy the material only for the purpose of teaching Apprentices working towards a City & Guilds qualification, or for internal administration purposes
- Apprentices may copy the material only for their own use when working towards a City & Guilds qualification

The Standard Copying Conditions (see the City & Guilds website) also apply.

Please note: National Occupational Standards are not © The City and Guilds of London Institute. Please check the conditions upon which they may be copied with the relevant Sector Skills Council.

Published by City & Guilds, a registered charity established to promote education and training

City & Guilds
1 Giltspur Street
London EC1A 9DD

www.cityandguilds.com