Practice Marking Materials for Technical Qualifications

2019

City & Guilds

Level 2 Bricklaying Synoptic Assignment (7905-004)

Introduction

The synoptic assignments for the City & Guilds Technical Qualifications are externally set summative assessments which are internally marked by tutors. It is the centre's responsibility to ensure candidates' work is marked in a standard way across the centre, using the specified marking grid, in order to rank performance on a single mark scale.

Practise marking materials are useful to support centre staff with internal standardisation and as a pre-standardisation activity. The materials are produced to support staff in the process of marking including how to effectively use marking grids and assessment objectives (AO).

The marking materials must be considered alongside the Technical qualifications Marking and Moderation Guide

It is recommended that all tutors, including any unlikely to mark, are included in early discussions around the use of the marking grid, as all tutors should understand the basis of marking as it could shape their teaching by helping candidates practise bringing their skills and knowledge together to complete a problem, and helping them learn how to explain and justify their choices in terms of the subject knowledge in preparation for summative assessment. Tutors must study the *Marking and Moderation Guide: https://www.cityandguilds.com/techbac/technical-qualifications/resources-and-support* which provides detailed information about generic assessment objectives, and the marking grid, to ensure they are clear about the different AOs and how they may show up in evidence for assignments in the subject area. If there is more than one tutor carrying out marking at the centre, this process should be carried out as part of a group activity to ensure all markers are clear and in agreement about what sorts of evidence are relevant for assessment and which AO they fit into.

The following materials could form the basis for pre-standardisation practice and discussion could take place using evidence from trial runs/formative assessment activities. Standardisation should also take place using the evidence from the actual assignment set for that year, so along with utilising this tool, please ensure that activities surrounding the 2019 assignment also take place.

Within this pack, you will find

- a sample task brief
- a copy of the marking grid used for the synoptic assessment

Tasks

Task 1

1a Produce two scaled drawings elevations of the bonding arrangements for the garden wall.

1b Produce a drawing and describe the process of setting out the garage.

1c Produce a drawing of the geometrical setting out for the arch.

Conditions of assessment:

The evidence for task 1 must be completed on your own, under supervised conditions.

What must be presented for marking and submitted for moderation (if applicable):

- completed scaled drawings of the bonding arrangements for the one brick walling
- completed drawing showing geometrical setting out for the semi-circular arch
- completed drawing and description of the setting out process for the garage.

Task 2

2a Produce a tools, materials and quantities list for all materials for the job.

2b Set out the first course of the wall.

Conditions of assessment:

The tools and materials list and the setting out must be produced alone under supervised conditions.

What must be presented for marking and submitted for moderation (if applicable):

- completed tools and materials list including calculation for quantities
- completed first course of the wall

Additional evidence of your performance that must be captured for marking and submitted for moderation (if applicable)

- your tutor's notes, recorded on a Practical Observation form, of your working practice describing the quality, consistency and accuracy of the finished work
- two photographs taken by your assessor of your completed **Task 2b** with
  - work area set out and dry bonded first course
  - materials loaded out ready for work

Task 3

3 Prepare and build the cavity wall.

Conditions of assessment:

The wall must be produced working alone, under supervised conditions.

You must work safely at all times. If you do not then the assessment will be stopped.

What must be presented for marking and submitted for moderation (if applicable):

- Completed wall.

PAST ASSIGNMENT (2018) DO NOT USE FOR LIVE ASSESSMENT.

Additional evidence of your performance that must be captured for marking and submitted for moderation (if applicable):

- ☐
- ☐ photographs taken by your assessor of **each** elevation
  - One for the front elevations
  - One for the rear elevations

PAST ASSIGNMENT (2018) DO NOT USE FOR LIVE ASSESSMENT.

Section 1 Task Brief

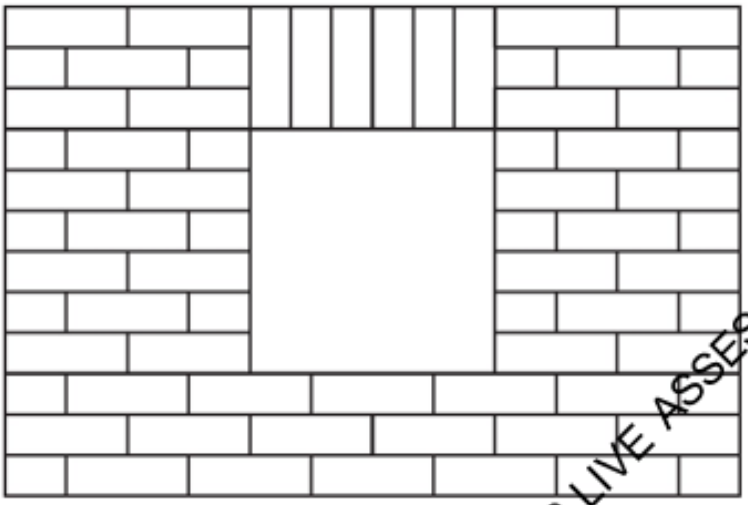

ELEVATION A

Figure 1

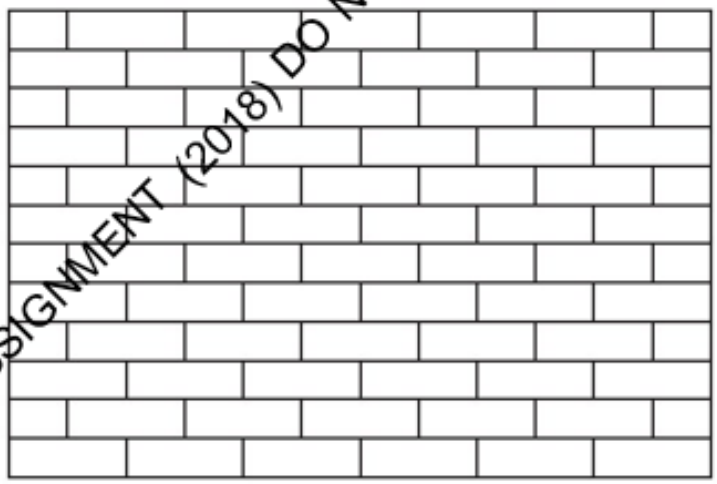

ELEVATION B

Figure 2

PAST ASSIGNMENT (2018) DO NOT USE FOR LIVE ASSESSMENT.

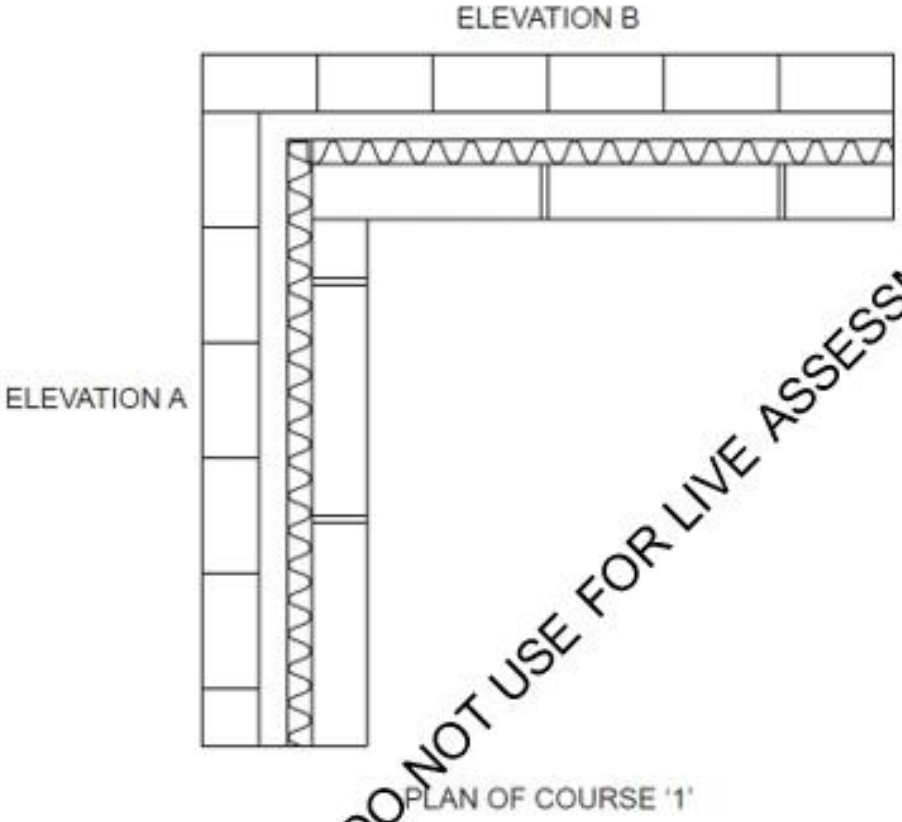

Figure 3

PAST ASSIGNMENT (2018) DO NOT USE FOR LIVE ASSESSMENT.

Section 2 Marking Grid

Marking grid

For any category, 0 marks may be awarded where there is no evidence of achievement

%	Assessment Objective	Band 1 descriptor Poor to limited	Band 2 descriptor Fair to good	Band 3 descriptor Strong to excellent
10	AO1 Recall of knowledge relating to the qualification LOs • Does the candidate seem to have the full breadth and depth of taught knowledge across the qualification to hand? • How accurate it their knowledge? Are there any gaps or misunderstandings evident? • How confident and secure does their knowledge seem?	(1-2 marks) Recall shows some weaknesses in breadth and/or accuracy. Hesitant, gaps, inaccuracy.	(3-4 marks) Recall is generally accurate and shows reasonable breadth. Inaccuracies and misunderstandings are infrequent and usually minor. Sound, minimal gaps.	(5-6 marks) Consistently strong evidence of accurate and confident recall from the breadth of knowledge. Accurate, confident, complete, fluent.
		Examples of types of knowledge expected: Knowledge of geometrical setting out, setting out an angle at 90°, linear measurements, bonding materials, tools and equipment required, construction techniques, terminology, safe method of work, positioning of materials and resources.		
		The candidate has demonstrated recall of knowledge, but it has been limited and/or showing inaccuracies.	The candidate has demonstrated recall of knowledge, which is mostly accurate.	The candidate has demonstrated in-depth and detailed knowledge, showing a higher degree of confidence and accuracy.

20	AO2 Understanding of concepts, theories and processes relating to the LOs • Does the candidate make connections and show causal links and explain why? • How well are theories and concepts applied to new situations/the assignment? • How well are exemplars chosen – how well do they illustrate the concept?	(1-4 marks) Some evidence of being able to give explanations of concepts and theories. Explanations appear to be recalled, simplistic or incomplete. Misunderstanding, illogical connections, guessing.	(5-8 marks) Explanations are logical. Showing comprehension and generally free from misunderstanding, but may lack depth or connections are incompletely explored. Logical, slightly disjointed, plausible.	(9-12 marks) Consistently strong evidence of clear causal links in explanations generated by the candidate. Candidate uses concepts and theories confidently in explaining decisions taken and application to new situations. Logical reasoning, thoughtful decisions, causal links, justified.
		Examples of understanding expected: Interpreting drawings, interpreting specifications, showing an understanding of the setting out processes, methods of work, applying Health & Safety legislation to planning and carrying out activities, risk assessments, showing an understanding of the correct sequence of work, calculating quantities of materials and components.		
		Limited understanding of the tasks and methods of work. Logical sequence of work not followed. Drawings/specifications not clearly interpreted or understood.	Good understanding shown across the tasks and methods of work. Logical sequence of work mostly followed. Drawings/specifications interpreted mostly correctly.	In-depth understanding shown across the tasks and methods of work. Logical sequence of work correctly followed. Drawings/specifications interpreted correctly.

40	AO3 Application of practical/ technical skills • How practiced/fluid does hand eye coordination and dexterity seem? • How confidently does the candidate use the breadth of practical skills open to them? • How accurately/ successfully has the candidate been able to use skills/achieve practical outcomes?	(1-8 marks) Some evidence of familiarity with practical skills. Some awkwardness in implementation, may show frustration out of inability rather than lack of care. Unable to adapt, frustrated, flaws, out of tolerance, imperfect, clumsy.	(9-16 marks) Generally successful application of skills, although areas of complexity may present a challenge. Skills are not yet second nature. Somewhat successful, some inconsistencies, fairly adept/ capable.	(17-24 marks) Consistently high levels of skill and/or dexterity, showing ability to successfully make adjustments to practice; able to deal successfully with complexity. Dextrous, fluid, comes naturally, skilled, practiced.
		Examples of skills expected: measuring skills; working safely; setting out, gauging, levelling and plumbing skills; correct use of tools, equipment and materials; positioning and fixing of components.		
		Few tasks completed, poor quality of work, a few tolerances met. To access higher marks Most tasks completed but to a generally poor standard. Tasks show inaccuracies. Demonstrates some skills when approaching the tasks.	Most tasks completed to an acceptable standard within a majority of tolerances. Demonstrates good range of skills when approaching the tasks. To access higher marks All tasks completed to a good standard. Measurements are mostly accurate.	All tasks completed to a high standard. Measurements are consistently accurate. All tolerances met. Demonstrates excellent range of skills when approaching the tasks. To access higher marks Tasks consistently completed to an excellent standard. Measurements are accurate with tolerances exceeded.

20	AO4 Bringing it all together - coherence of the whole subject • Does the candidate draw from the breadth of their knowledge and skills? • Does the candidate remember to reflect on theory when solving practical problems? • How well can the candidate work out solutions to new contexts/problems on their own?	(1-4 marks) Some evidence of consideration of theory when attempting tasks. Tends to attend to single aspects at a time without considering implication of contextual information. Some random trial and error, new situations are challenging, expects guidance, narrow. May need prompting.	(5-8 marks) Shows good application of theory to practice and new context, some inconsistencies. Remembers to apply theory, somewhat successful at achieving fitness for purpose. Some consolidation of theory and practice.	(9-12 marks) Strong evidence of thorough consideration of the context and use of theory and skills to achieve fitness for purpose. Purposeful experimentation, plausible ideas, guided by theory and experience, fit for purpose, integrated, uses whole toolkit of theory and skills.
		Examples of bringing it all together: applying knowledge and understanding to the tasks, able to plan activities from information provided. Materials and techniques used appropriately, correct sequence of operations carried out when setting out and carrying out the work. Safe and clean working practices demonstrated.		
		There is limited evidence of the candidate using their knowledge, understanding and skills to complete the tasks. Tasks are not planned, prepared or completed to the specification. Choices and decisions have been poorly informed, showing little consideration before being implemented.	The candidate brings together their knowledge, understanding and skills well in order to complete the tasks. Tasks are planned, prepared and completed to the specification with some errors. Choices and decisions have been inconsistently informed, considered and implemented.	The candidate has made excellent use of their knowledge, understanding and skills across the tasks. Tasks are planned, prepared and completed to the specification. Methodical approach to work. Choices and decisions have been well informed, considered and implemented.

10	AO5 Attending to detail/ perfecting • Does the candidate routinely check on quality, finish, etc. and attend to imperfections/ omissions • How much is accuracy a result of persistent care and attention (eg measure twice, cut once)? • Would you describe the candidate as a perfectionist and wholly engaged in the subject?	(1-2 marks) Easily distracted or lack of checking. Insufficiently concerned by poor result; little attempt to improve. Gives up too early; focus may be on completion rather than quality of outcome. Careless, imprecise, flawed, uncaring, unfocussed, unobservant, unmotivated.	(3-4 marks) Aims for satisfactory result but may not persist beyond this. Uses feedback methods but perhaps not fully or consistently. Variable/intermittent attention, reasonably conscientious, some imperfections, unremarkable.	(5-6 marks) Alert, focussed on task. Attentive and persistently pursuing excellence. Using feedback to identify problems for correction. Noticing, checking, persistent, perfecting, refining, accurate, focus on quality, precision, refinement, faultless, meticulous.
		Examples of attending to detail: Checking for accuracy at each stage of completed work. Using levels and gauges consistently. Checking that work is clean and defect free. Safe and systematic approach to work and cleanliness. Considerations for other trades.		
		There is limited attention to detail. Rarely checks that work is accurate, clean and defect free. Poor housekeeping. Poor consideration for other trades.	There is good attention to detail. Inconsistently checks that work is accurate, clean and defect free. Good housekeeping. Some consideration for other trades.	The candidate has been focused on the tasks showing extreme care. Consistently and carefully checks that work is accurate, clean and defect free. Excellent housekeeping. Excellen: consideration for other trades.

Section 3 Learner Materials – Pass Learner Task 1 – 1A

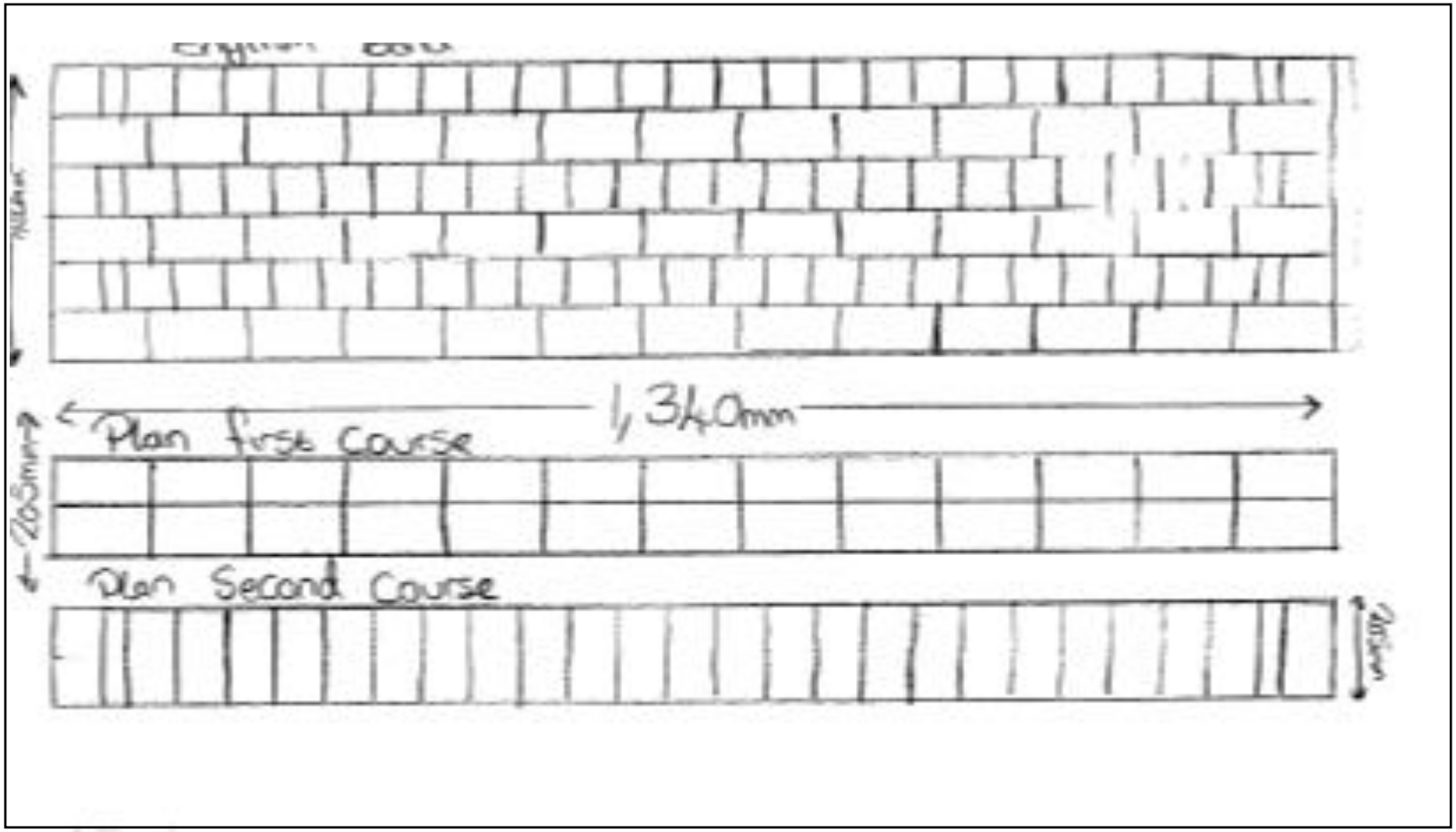

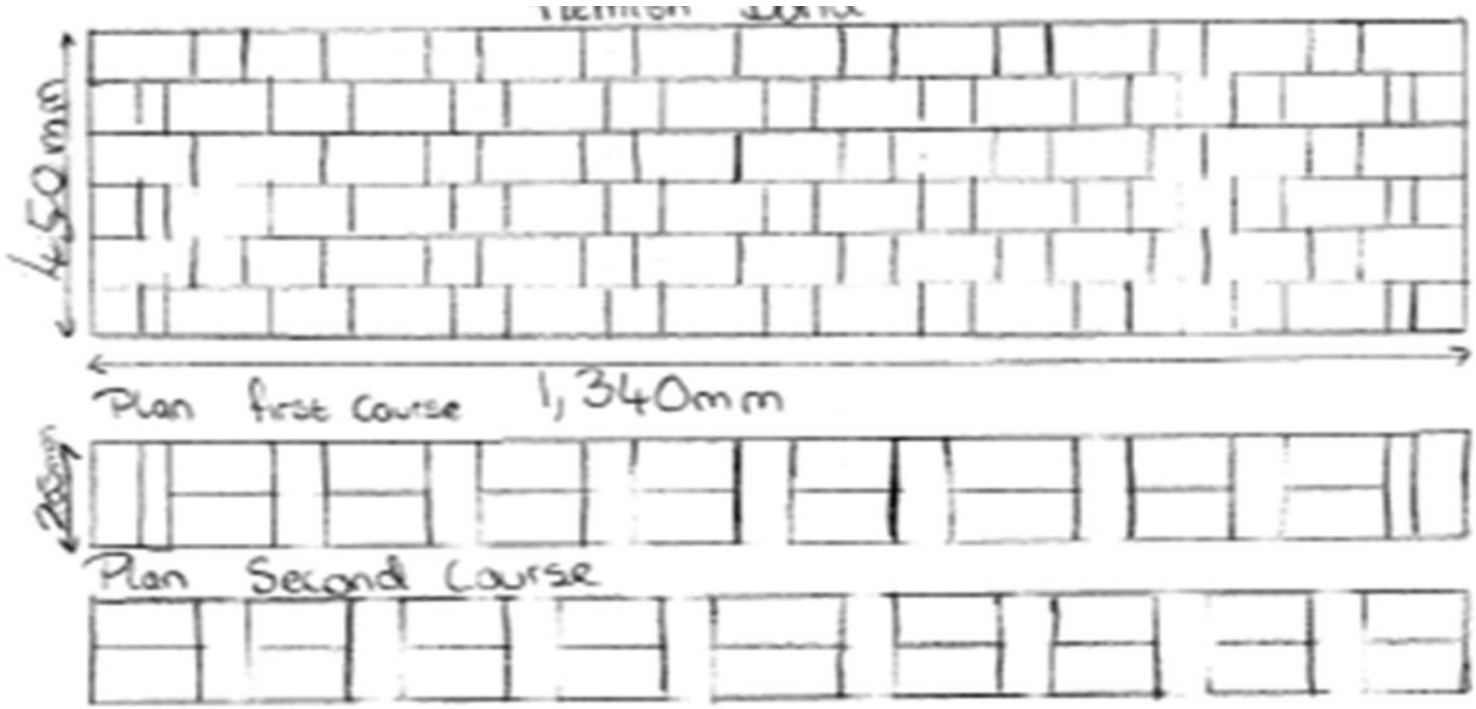
450mm
1,340mm
Plan first course
Plan Second Course

Task 1b

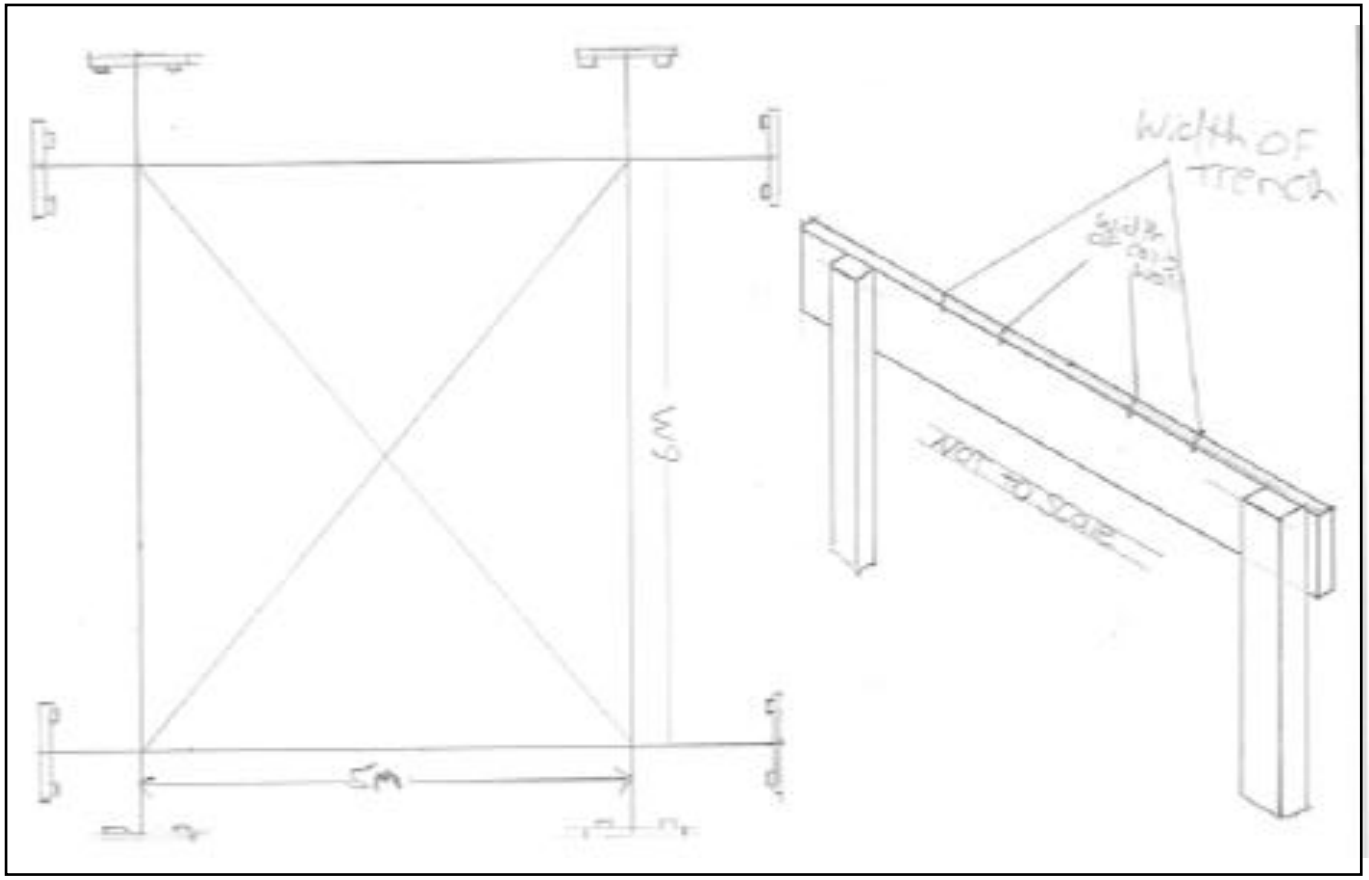

ware

Task 1b description of setting out process for garage

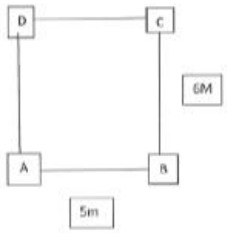

Step 1

Firstly read the drawing to find out where the position of the frontage line while be, where the garage has to go on the plot and the size and dimensions.

Step 2

To establish the frontage line always make it longer than the measurement given on the drawing. The frontage line will be set back a certain distance from the curb which is shown on the drawing.

Step 3

To position peg A the first thing you have to do is look at the drawing and see how far the peg has to come along the frontage line from existing boundaries or buildings. Once you have found out how far it has come in you bang a peg the set distance along the frontage line. You'll then place the peg so the measurement is in the middle, then bang a nail at the distance set.

Step 4

To position peg B check on the drawing how wide the opening needs to be then measure from peg A 5 meters then place peg B also banging in a nail at the set distance.

Step 5

To get a 90 degree angle to place peg C you use the 3-4-5 method. To do this measure 3 meters from peg A to peg B then place a peg and measure 4 meters from peg B towards where peg C will be placed. Then the diagonal measurement should be 5 meters. This then will give you a 90 degree angle. Then measure 6 meters from peg B making sure it is in line with the peg you placed when you used the 3-4-5 method keeping the 90 degree angle. Then place the peg at 6 meters putting a nail on the peg at 6 meters.

Step 6

Simic
Jard

task 1B description of setting out process to garage (2)

To establish peg D you repeat the 3-4-5 method from peg A. so measure 3 meters from peg A along the frontage line and place a peg. Next measure 4 meters up towards where peg D is going to be and place a peg then check the diagonals which should add up to 5 meters. After you've done that you then measure 6 meters from peg A making sure it is in line with the peg used to make the 90 degree angle, then place a peg at the 6 meters and place another nail. Then you run a ranging line around all four pegs.

Step 7

After all four pegs have been placed you can take away the pegs used to do the 3-4-5 method. You can also remove the frontage line because it is not needed no more. To check the building is square you need to do this calculation: 6x6=36, 5x5=25, 36+25=61, square root of 61 = 7.8102496

Step 8

Then you need to place the corner profiles. These will be set a curtain distance away from the corner pegs of the building. How far away the corner profile has to be is decided if the foundation is being dug by machine or by hand because if it is dug out by machine the corner profiles will need to be further back so the machinery doesn't damage them but if it's being dug out by hand then they can be closer as only one wheel barrow will need to get there. Once you have place the corner profiles you have to mark on there with a saw cut or a nail the width of the foundation and where the bricks and blocks are going.

Step 9

When you mark up the corner profiles you pull the ranging lines through the corner profile and mark with a nail where the ranging line comes through the corner profile.

Once the foundation has been poured and set:

Before the brickwork is started the bricklayer needs to refer to the drawings to know where the garage door, side door and windows are going to be. They will also need to know the arrangement of the bonding to suit when setting out the brickwork. Garage door = 3m, Side door = 900mm, Side window = 1200mm

Task 1c

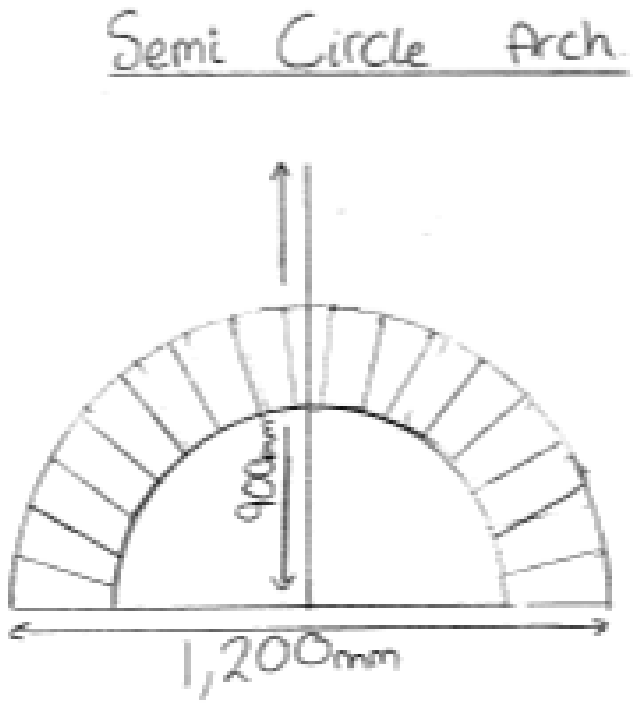

Task 2

Materials list

- Bricks x132
- Blocks x17
- Wall ties x14
- Mortar
- DPC
- Steel lintel
- Insolation x2(boards)

Tools List

- Trowel
- Pointing trowel
- Spirit level
- Jointing iron
- Tape measure
- Boat level
- Spot board
- Sack barrow
- Wheel barrow
- Saw
- Hammer and bolster
- Scutch hammer

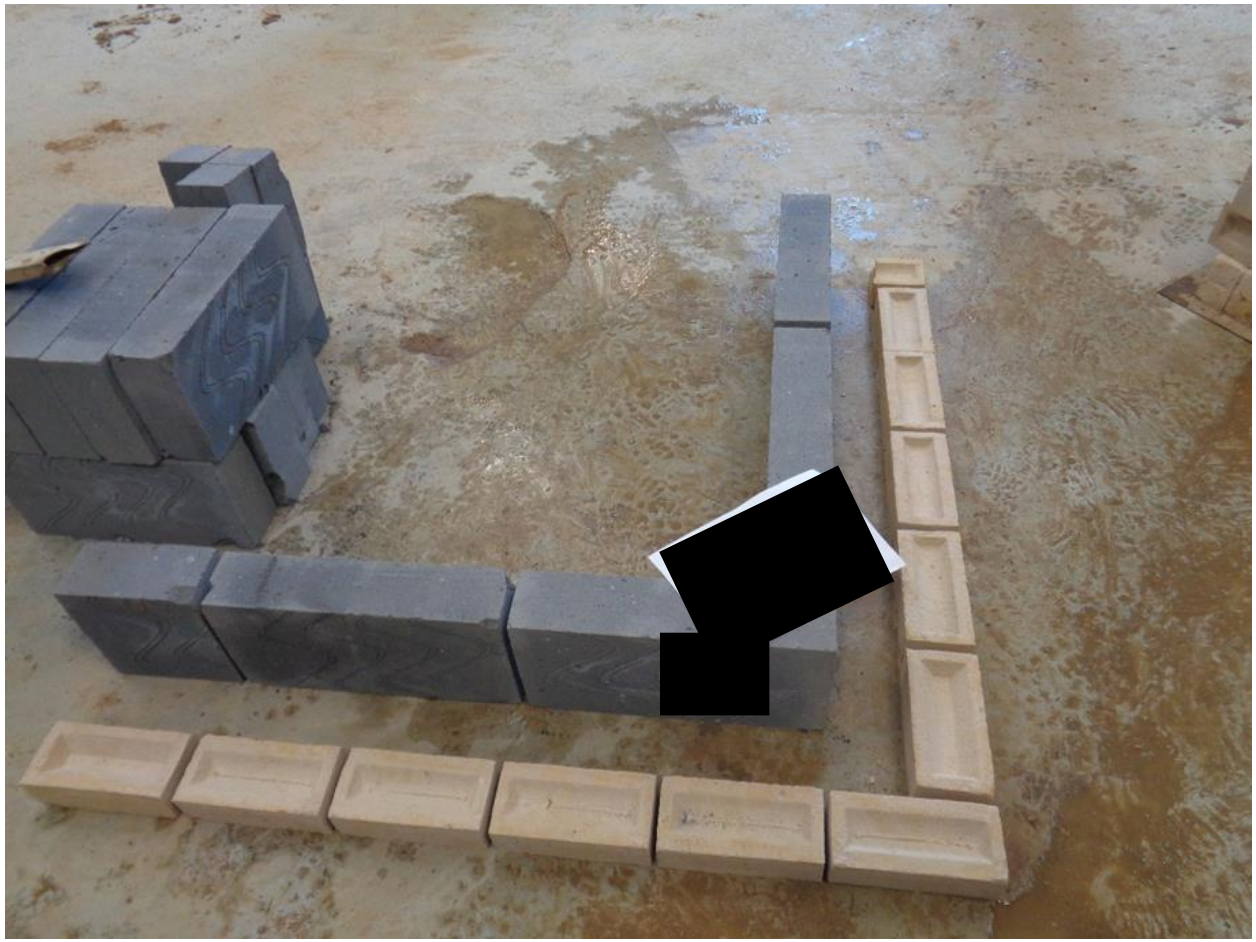

Declaration of Authenticity

Candidate name	Candidate number
Penny Snowball	123355
Centre name	Centre number
St Andrews Academy	4567382

Candidate:

I confirm that all work submitted is my own, and that I have acknowledged all sources I have used.

Candidate signature Date

Tutor:

I confirm that all work was conducted under conditions designed to assure the authenticity of the candidate's work, and am satisfied that, to the best of my knowledge, the work produced is solely that of the candidate.

Tutor signature Date

Has the candidate received any additional support in the production of this work?

Tick Yes ☐ No ☐

If the answer is yes, give details below and on a separate sheet if necessary.

Note:
Where the candidate and/or tutor is unable to, or does not confirm authenticity through signing this declaration form, the work will not be accepted at moderation and a mark of zero will be given. If any question of authenticity arises, the tutor may be contacted for justification of authentication.

Practical Observation Form

Technical Qualifications

Candidate name:	Candidate number:
Penny Snowball	12335
Centre number:	**Assessment ID**
4567321	292991

Please complete the table below with reference to the relevant Assessment Objectives, as indicated in the Assessment Packs. Do not allocate marks at this stage.

Task 3 **Prepare and build the cavity wall**

Contextualised examples of AOs per task	**Notes – detailed, accurate and differentiating notes that identify areas of strength and weakness are necessary to distinguish between qualities of performance, and to facilitate accurate allocation of marks once all evidence has been submitted.**
This column provides prompts to support the notes you record, however **it is not a definitive list** of the types of evidence or the assessment objectives that are relevant. **Prepare and build the cavity wall** **AO1 Recall**: • linear measurements	Materials and tools correctly placed within distance of model. Learner referred to drawing to establish window opening. Corner was taken up 2 courses to DPC height, DPC was correctly measured and safely cut and was correctly laid creating a mortar sandwich between courses on both skins. Correct lap on DPC. Smearing visible on joints with joints Learner not confident on placement of wall ties, prompt needed when questioned. Wall tie placement correct at course 3.

• bonding materials
• tools and equipment required
• construction techniques
• terminology
AO2 Understanding:
• interpreting drawings/specifications, methods of work
• showing an understanding of the correct sequence of work
AO3 Practical skills:
• measuring skills;
• gauging, levelling and plumbing skills
• correct use of tools, equipment and materials
• positioning and fixing of components
• Tolerances
  ○ Brickwork gauge ±4 mm
  ○ Plumb of the soldiers ±3 mm
  ○ Plumb to all plumbing points ±5 mm
  ○ Ranging to brick work ±4 mm
  ○ Ranging to block work ±5 mm
  ○ Level ±5 mm
  ○ Opening size ±5 mm
•
AO4 Bringing it together:
• applying knowledge and understanding to the tasks, able to plan activities from information provided
	Placement of wall ties wrong on course 6 (not needed), wall tie missed out on elevation 'a'
	Learner is confident and checks for plumb, level and gauge.
	Good use of line and pins evident.
	Insulation is placed correctly, cut and held back with retaining clips.
	Lintel placed with correct bearing either side of opening.
	Tray damp and weep holes placed correctly and confidently.
	
	<u>Tolerances on marking</u>
	
	Gauge – 8mm high
	Plumb on all plumbing points - 4-6mm out at various points
	Plumb on soldiers – 3-4mm out
	Ranging to brickwork/blockwork – 8mm out
	Level – 5mm out
	Opening size – good on brickwork, bigger on blockwork
	Pointing – brick pointing good but not enough care taken with blockwork as holes are visible.
	Learner has followed the correct sequence of work at different stages of the task; referring back to previous knowledge gained but has struggled with certain elements within the task. More care needed to be taken to eradicate simple errors.
	Learner made constant checks to his work.

• materials and techniques used appropriately, correct sequence of operations carried out when carrying out the work **AO5 Attention to detail**: • checking for accuracy at each stage of completed work • considerations for other trades	
Health and safety practices **AO1 Recall**: • tools and equipment required • safe method of work **AO2 Understanding**: • applying Health & Safety legislation to planning and carrying out activities, risk assessments, showing an understanding of the correct sequence of work. **AO3 Practical skills**: • working safely • correct use of tools, equipment and materials **AO4 Bringing it together**: • materials and techniques used appropriately • correct sequence of operations carried out when setting out and carrying out the work • safe and clean working practices demonstrated **AO5 Attention to detail**: • checking that work is clean and defect free. Safe and systematic approach to work and cleanliness	Learner observed all health and safety requirements at all times. Correct PPE worn when cutting materials. Safe system of work evident. All materials safely transported to work area. Correct posture when manual handling materials.

Housekeeping and cleanliness **AO5 Attention to detail**: • checking for accuracy • checking that work is clean and defect free • safe and systematic approach to work and cleanliness.	Good housekeeping apparent with all cuts done in the cutting area and work are tidy and kept tidy at various times through assessment. Constant checks made on gauge, plumb and level. Staining evident on bricks but minimal but pointing on blockwork poor.
Overall appearance of the finished wall **AO3 Practical skills**: • measuring skills • working safely; gauging, levelling and plumbing skills • correct use of tools, equipment and materials • positioning and fixing of components. **AO5 Attention to detail**: • checking for accuracy at each stage of completed work. • Using levels and gauge consistently. • Checking that work is clean and defect free. Safe and systematic approach to work and cleanliness. • Considerations for other trades.	The overall appearance of the finished brickwork was to a good standard with nearly all tolerances met; this has been achieved by demonstrating a range of skills from previous learning. The pointing of blockwork is disappointing as the learner had time to rectify. Gauge high by 8mm Placement of DPC was good with correct lap, wall ties inconsistent with 1 missed and not needed. Staining visible to brickwork (minimal) Good hand skills evident throughout assessment. Learner focused throughout the task. A good positive approach to the task but more care needed.
Timings **AO4 Bringing it together**: • able to plan activities from information provided	Learner was confident in mostly all areas, no questions asked or any concerns raised. Overall, the task was completed with a good understanding of what was required and planned well from setting out to the finish.

• correct sequence of operations carried out when setting out and carrying out the work	All decisions made through the assessment have been guided by previous knowledge, which was evident in the way the learner approached task.

Candidate Record Form

Candidate Name: **Assessment ID:**

Candidate Number:

Centre Number:

Marker Notes – Please always refer to the relevant marking grid for guidance on allocating marks and make notes which describe the quality of the evidence and justification of marks.

***Marker Notes** – Please always refer to the relevant marking grid for guidance on allocating marks and make notes that describe the quality of the evidence and justification of marks. Expand boxes as required.*

AO1 – Recall - Breadth, depth, accuracy						
10%	**1**	**2**	**3**	**4**	**5**	**6**
AO1 Mark 4	All tool, material and quantities lists completed prior to task to enable what was needed showing good prior knowledge. Dry bonding evident. Model was set out correctly to size as per drawing. Checked square Checking for accuracy on plumb, pointing and setting out all observed. Good use of materials shown in the loading out and setting up process. Hesitant at setting out of cavity on corner, needed reassurance. The candidate has demonstrated a recall of knowledge, which is mostly accurate, however Flemish bonding deyain was very poor and there was no reference to it in the text.					

AO2 – Understanding - Security of concepts, causal links												
20%	**1**	**2**	**3**	**4**	**5**	**6**	**7**	**8**	**9**	**10**	**11**	**12**
AO2 Mark 8	Learner was able to read drawings and relay information into setting out the model. Calculations done prior to work commencing, this coupled with all brick/block cuts in place before assessment started showed good planning. Good system of work shown on how he approached the whole assessment. Learner worked in a safe manner at all times, following PPE requirements. Understood requirements needed for task. The task is complete and a good understanding of the logical sequence of work seems to have been adopted. Drawings and specifications have been interpreted correctly.											

AO3 - Practical skill - Dexterity, fluidity, confidence, ease of application																								
40%	1	2	3	4	5	6	7	8	9	10	11	12	13	14	15	16	17	18	19	20	21	22	23	24
AO3 Mark 15	Overall, a neat and tidy model that had good setting out and square. Plumb and level where within the tolerances set out and a good approach was evident in the learners attitude to the task. Gauge and ranging have let the learner down and could have been eradicated if more care and time taken. Blockwork slightly higher than brickwork. Soldier caused a few problems to the learner with this higher than brickwork. Weep vents placed a bit high. Slight smearing to the bricks evident. Good hand skills shown. Placement of components good. Most tasks were complete to a reasonable standard with most several areas not meeting the tolerances. Perhaps the mark here was a little high.																							

AO4 – Bringing it together - use of knowledge to apply skills in new context												
20%	**1**	**2**	**3**	**4**	**5**	**6**	**7**	**8**	**9**	**10**	**11**	**12**
AO4 Mark 7	The learner undertook the task with good theoretical knowledge which helped him problem solve the task, so that he completed the model within the time allotted. This showed in his preparation i.e. all brick and blocks cut and DPC cut to size all before any work was undertaken Work area kept tidy with all cuts done away from workplace in cutting area.											

	Learner worked in a safe manner at all times and observed all health and safety requirements. Good use of materials evident – pre-cutting of bricks and blocks. Learner was able to recall both practical and theory in completing models. The candidate used, knowledge, understanding and skill completed the task to a reasonable standard.

AO5 - Attending to detail / perfecting - Repeated checking, perfecting, noticing, engaged

10%	**1**	**2**	**3**	**4**	**5**	**6**
AO5 Mark 3	The learner worked hard to ensure that the model produced was neat and tidy with only a few blemishes visible on the brickwork. Through observation, it was clear that the learner was routinely checking work for accuracy, although on marking some tolerances had not been met. A few errors made that had been feedback on previous models undertaken. Attention to detail lacked in his pointing on the blockwork and by not ensuring gauge correctly. Work area was clean and consideration showed to all other candidates within workshop. A very positive attitude shown throughout the task by the learner. Positive feedback from assessor, however it is difficult to measure this from photographs alone. The visit will be very beneficial to all aspects of assessment.					

Tutor signature	**Date**
	1-5-18

Total
34

Section 5 Principal Moderator's guidance, hints and tips.

This practise marking material has been produced to be used for standardisation activities and for centre guidance in the early years of the qualification. The marks allocated to each learner are in accordance with the Principal Moderator marks and show the standard set for this qualification.

To make holistic judgments, it is necessary to ensure that all tasks are completed and submitted prior to assigning any final marks. Practical tasks are not marked independently of written submissions so ensure that all tasks have been completed before assigning any marks.

When judging ephemeral performances / practical skills, centres must ensure that the evidence is in a format visible to the marker/moderator and gives sufficient qualitative detail to aid moderation. Observers and markers should ensure their notes are comprehensive, employing key words written in the marking grids and describing how, where or why the work is good or better. Along with this they should ensure that any verbal questions are documented and that weaknesses / mistakes as well as strengths / exemplary practice are noted on the PO form. These notes will enable the centre marker and the moderator get a feel for the practical skills shown by each individual on the synoptic assessment day/s and will assist in allocation of marks and rank order