T-LEVELS | Institute for Apprenticeships & Technical Education

T Level Technical Qualification in Maintenance, Installation and Repair for Engineering and Manufacturing (8712-33)

Electrical and Electronic (313)

Practical Assignment

Sample Candidate Pack

First teaching from September 2022

Version 1.0

City & Guilds | eal

Contents

1. Assessment 3

2. Candidate Guidance 4

3. Assignment brief 7

1. Assessment

This assessment is for the Maintenance engineering technologies: Electrical and Electronic Occupational Specialism component of the Technical Qualification. This pack consists of a practical assignment brief, including drawings and diagrams as necessary, that you will need to use to complete your assessment tasks.

2. Candidate Guidance

General guidance

This is a formal assessment that you will be marked and graded on. You will be marked on the quality and accuracy of the work you produce. It is therefore important that you carry your work out to the highest standard you can.

Plagiarism

Plagiarism is the failure to acknowledge sources properly and/or the submission of another person's work as if it were your own. Plagiarism is not allowed in this assignment.

This assignment is an assessment of your abilities, so the work submitted must be all your own and carried out under the conditions stated. You will be asked to sign a declaration that you have not had any help with the assignment. Your assessor is allowed to give you some help understanding the instructions if necessary, but they will record any other guidance you need, and this will be taken into account during marking.

Where research is allowed, your assessor must be able to identify which work you have done yourself, and what you have found from other sources. It is therefore important to make sure you acknowledge sources used and clearly reference any information taken from them (e.g. providing as a minimum a list of web addresses / books / articles etc used).

Timings and planning

You are advised to study the details of the assessment before starting.

You should check with your assessor that you have all the relevant materials, equipment and information/data sources that you need before starting the assessment.

You should take care when planning to make sure you have divided the time available between parts of the assignment tasks appropriately. Timings for tasks are provided within this pack to support with planning and time allocation.

If you have a good reason for needing more time, you will need to explain the reasons to your assessor and agree a new deadline date. Changes to dates will be at the discretion of the assessor, and they may not mark work that is handed in after the agreed deadlines.

Any requested changes to deadlines must be agreed by both your assessor and City & Guilds.

Word counts

Typical word counts, where indicated, are to be used as approximates for guidance to support the production of sufficient evidence. The marking will relate to the quality of the evidence produced and not whether the word count has been met.

Health and Safety

You must always work safely, in particular while you are carrying out practical tasks.

You must always follow any relevant Health and Safety regulations, Risk Assessments and codes of practice in line with centre requirements.

If your assessor sees you working in a way that is unsafe for yourself or others, they will highlight the issue and ask you to stop the task immediately. Your assessor will not be able to reassess you until they are sure you are ready for assessment and can work safely.

Presentation of work

Presentation of work must be neat, legible and appropriate to the task, and evidence required for submission.

You should make sure that each piece of evidence including any forms are clearly labelled with your name and the project reference.

All electronic files must be given a clear file name that allows your assessor to identify it as your work.

Written work may be word-processed or handwritten unless stated otherwise.

All sketches and drawings should be neat, tidy and annotated.

Calculations should be set out clearly, with all working shown, as well as any assumptions made. You should use appropriate units at all times, consistent with the requirements of the assignment.

Instructions for this assignment

Ensure you read all the provided assessment information issued by the assessor.

You must work independently and not share your work with any other candidates in these supervised assessment sessions.

Your work will be kept secure during any supervised breaks that are taken.

Internet access is **not** allowed, unless otherwise stated in the task.

You must complete all the tasks and present all evidence that is detailed in each task.

This assessment booklet contains the assignment brief.

The tasks have been separated into individual documents which will be handed to you at the start of each task.

Within each task you will find the following:

- **Conditions of assessment:** This will tell you the duration and rules you must follow when completing a task.
- **Controlled conditions:** This will tell you the rules you must follow when completing each task e.g. You must not share or discuss your work with other candidates.
- **What must be produced for marking:** This describes the evidence you must submit when the task is completed. Be aware failure to submit any evidence requested can adversely affect your overall mark for the assessment.
- **Additional evidence for this task:** This describes other forms of evidence that will be collected by the assessor to support the marking of your performance. This will often include but not limited to photographic and video evidence.

Assessment themes

You will be assessed against a number of assessment themes. This assignment has a total of 90 marks. The table below shows the weighting of the marks for each of the assessment themes.

Assessment theme	Approximate weighting %
Health and safety	13%
Planning and preparation	20%
Systems and components	27%
Working with faults	17%
Reviewing and reporting	23%

3. Assignment brief

You are a maintenance engineer working for a local electrical and electronic engineering company.

Your supervisor has given you a request from a regular client asking you to perform a planned maintenance activity on an alternating current (AC) to direct current (DC) power conversion system. They have also reported to your supervisor that the system has not been functioning as expected and may therefore be faulty.

A block diagram, schematic diagram and specification detailing the power conversion system's layout and expected operation are shown in Figures 1 and 2 below.

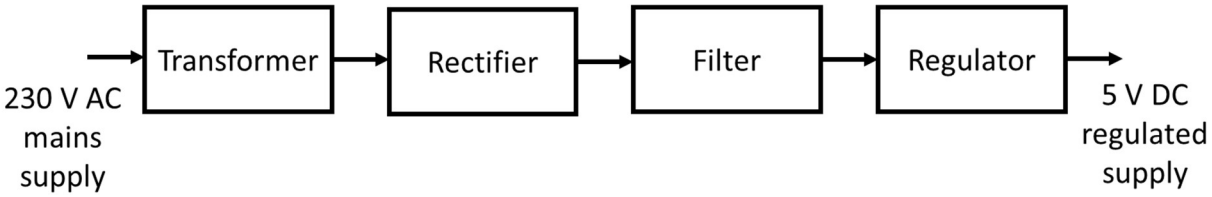

Figure 1 – Block diagram of system

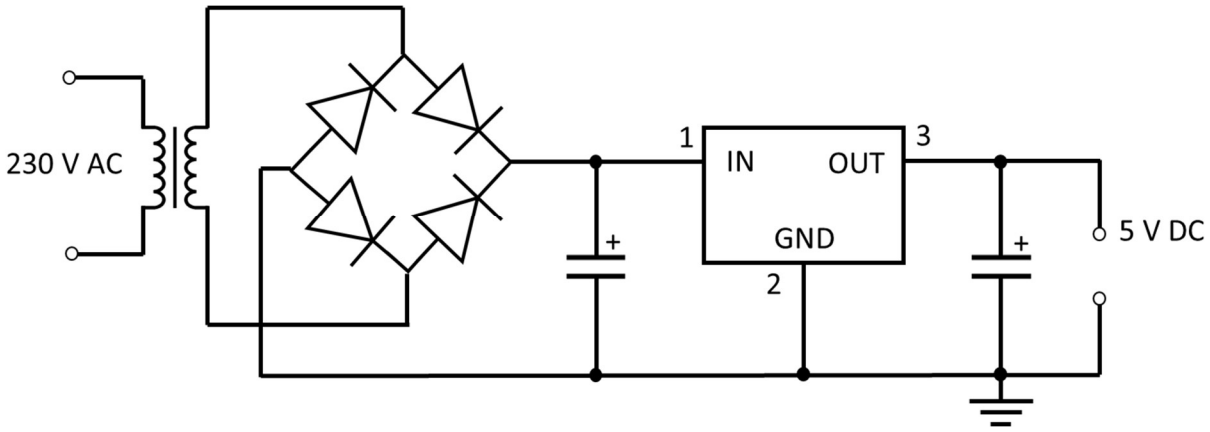

Figure 2 – Circuit schematic

Specification:
When in normal operation each block of the system should function as follows:

- the transformer should convert the 230 V mains AC voltage to a lower AC voltage
- the rectifier should convert the AC voltage into a DC voltage
- the filter should remove any large fluctuations from the rectifier output voltage
- the regulator should use diodes to remove any remaining voltage ripples and produce the required 5 V DC voltage.

You must:

- plan the maintenance required
- perform the maintenance activity, including diagnosing any faults and performing subsequent repairs
- review and report the findings of the maintenance completed.

This assignment has a time allocation of **22 hours**.

The T Level is a qualification approved and managed by the Institute for Apprenticeships and Technical Education.

Copyright in this document belongs to, and is used under licence from, the Institute for Apprenticeships and Technical Education, © 2021. 'T-LEVELS' is a registered trademark of the Department for Education. 'T Level' is a registered trademark of the Institute for Apprenticeships and Technical Education. 'Institute for Apprenticeships & Technical Education' and logo are registered trademarks of the Institute for Apprenticeships and Technical Education.

We make every effort to ensure that the information contained in this publication is true and correct at the time of going to press. However, City & Guilds' products and services are subject to continuous development and improvement, and the right is reserved to change products and services from time to time. City & Guilds cannot accept responsibility for any loss or damage arising from the use of information in this publication.

/ƛǘȅ ϑ DdzƛfŘǎ [ƛƴƛǘŜŘ ǿwŜƎ b2 мсрмоутуǘф ! ff ℕƛƎKǘǎ ℕŜǎŜℕǾŜŘф /ƛǘȅ ϑ DdzƛfŘǎ ƛǎ ǀ· ǘℕǀ·ŘŜƴǀ·ℕƪ 2Ŧ /ƛǘȅ ϑ DdzƛfŘǎ [ƛƴƛǘŜŘф
City and Guilds Group Giltspur House, 5–6 Giltspur Street London EC1A 9DE