T Level Technical Qualification in Maintenance, Installation and Repair for Engineering and Manufacturing (Level 3)

Maintenance Engineering Technologies: Mechatronic Engineering Occupational Specialism (8712-312)

Practical Assignment

Candidate Pack (Sample)

September 2025 Version 2.0

Contents

1. Assessment **4**

2. Candidate guidance **5**

3. Assignment brief **8**

4. Tasks **11**

Task 1 – Plan the maintenance activities 11

Task 2 – Performing the maintenance activities. 12

Task 3a – Review and report the maintenance activities 14

Task 3b – Peer review 15

Task 4 – Complete handover 17

Version and date	Change detail	Section
V1.0 June 2023	Approved version	n/a
V2.0 September 2025	Refinement of layout and formatting Removal of any duplicated information Candidate guidance, Brief and Tasks amalgamated into one document	All

1. Assessment

This assessment is for the Maintenance engineering technologies: Mechatronic Occupational Specialism component of the Technical Qualification. This pack consists of a practical assignment brief, including drawings and diagrams as necessary, that you will need to use to complete your assessment tasks.

2. Candidate guidance

General guidance

This is a formal assessment that you will be marked and graded on. You will be marked on the quality and accuracy of the work you produce. It is therefore important that you carry your work out to the highest standard you can.

Health and safety

You must always work safely, in particular while you are carrying out practical tasks.

You must always follow any relevant health and safety regulations, risk assessments and codes of practice in line with centre requirements.

If your assessor sees you working in a way that is unsafe for yourself or others, they will highlight the issue and ask you to stop the task immediately.

Plagiarism

Plagiarism is the failure to acknowledge sources properly and/or the submission of another person's work as if it were your own. Plagiarism is not allowed in this assignment.

This assignment is an assessment of your abilities, so the work submitted must be all your own and carried out under the conditions stated. You will be asked to sign a declaration that you have not had any help with the assignment. Your assessor is allowed to give you general advice, such as, clarification of the task instructions. However, general advice will not include:

- any specific advice on how to improve work to meet the required standard
- feedback on anything missing from your work
- any intervention that improves the standard or presentation of work

If there is a need to provide more than general advice your assessor will need to record the advice, they have given and take it into account when marking the submitted work.

Where research is allowed, your assessor must be able to identify which parts of the work you have done yourself, and what you have found from other sources. It is therefore important to make sure you acknowledge the sources you used and clearly reference any information taken from them (e.g. providing as a minimum a list of web addresses, books, articles etc that you used).

Use of Artificial Intelligence (AI)

AI may only be used as a source where the use of the internet is allowed for a research task. Where you use AI, you must acknowledge its use and show clearly how you have used it. Please be aware that how you have decided to use it may impact on the overall mark you are allocated.

Guidance and feedback

There are some rules around how much guidance and feedback your assessor can provide as part of completing the assignment. Your assessor is allowed to give you some help in understanding the task instructions if necessary. However, if significant clarification and guidance is provided by your assessor this will be recorded and considered as part of the marking process and may reduce your mark. Your assessor will make it clear if any guidance given may reduce your mark before it is given, so that you understand this when asking for guidance.

Timings and planning
You are advised to study the details of the assessment before starting.

You should check with your assessor that you have all the relevant materials, equipment and information/data sources that you need before starting the assessment.

You should take care when planning to make sure you have appropriately divided the time available between parts of the assignment tasks. Timings for tasks are provided within this pack to support with planning and time allocation.

If you have a good reason for needing more time, you will need to explain the reasons to your assessor and agree a new time for the assessment to take place. Any changes will be at the discretion of the assessor and agreed to by City & Guilds.

Word counts
Typical word counts, where indicated, are to be used as approximates for guidance to support the production of sufficient evidence. The marking will relate to the quality of the evidence produced and not whether the word count has been met.

Submission of evidence
Your work will be submitted as final at the end of each assessment session. You will not have an opportunity to rework any of your evidence once the assessment session ends. However, if through other tasks within the project, you develop your ideas or build on earlier tasks, then you should continue to build on these and should use your evaluation to outline the reasons why this happened.

Presentation of work
The presentation of your work must be neat, legible and appropriate to the task and evidence required for submission.

You should make sure that each piece of evidence, including any forms, are clearly labelled with your name and the task reference.

All electronic files must be given a clear file name that allows your assessor to identify it as your work.

Written work may be digital or handwritten unless stated otherwise.

All sketches and drawings should be neat, tidy and annotated.

Calculations should be set out clearly, showing all working and any assumptions you made. You should use appropriate units at all times, consistent with the requirements of the assignment.

Instructions for this assignment
Ensure you read all the provided assessment information issued by the assessor

You must work independently and not share your work with any other candidates in these supervised assessment sessions.

Your work will be kept secure during any supervised breaks that are taken.

Internet access is **not** allowed, unless otherwise stated in the task.

You will not be permitted any additional notes, such as printed resources and textbooks, unless otherwise stated in the conditions for assessment.

You must complete all the tasks and present all evidence that is detailed in each task.

This assessment booklet contains the assignment brief.

The tasks have been separated into individual documents which will be handed to you at the start of each task.

Any additional documents/templates needed for the task will be provided to you by the assessor.

Within each task you will find the following:

- **Conditions of assessment:** This will tell you the duration and rules you must follow when completing a task.
- **Controlled conditions:** This will tell you the rules you must follow when completing each task. For example, you must not share or discuss your work with other candidates.
- **What must be produced for marking:** This describes the evidence you must submit when the task is completed. Be aware that failure to submit any evidence requested can adversely affect your overall mark for the assessment.
- **Additional evidence for this task:** This describes other forms of evidence that will be collected by the assessor to support the marking of your performance. This will often include but is not limited to, photographic and video evidence.
- **Resources:** Provides a list of equipment, documents or tools that you will have access to, to complete the task/sub task.

3. Assignment brief

You are a newly qualified mechatronic engineer working for a maintenance company.

The client has contacted your supervisor to report an offline motor fault on a Selective Compliance Assembly Robot Arm (SCARA), as shown in Figures 1, 2 and 3, which is being indicated on the human machine interface (HMI). The system is also due for planned maintenance.

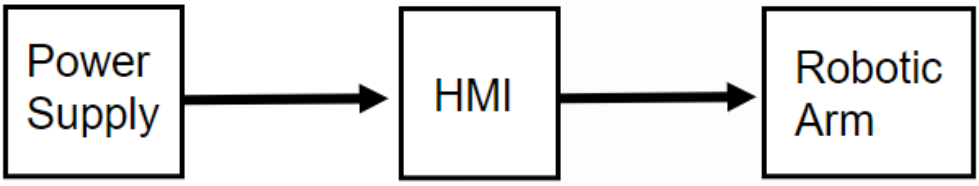

Figure 1 – Block diagram

Specification:

When in normal operation, the SCARA should function as follows:

- a programmable HMI (Fig 1) displays the current state of operation
- the first and second independently operable drive motors are supported by a base which also contains a motor (Fig 2)
- toothed belts engage toothed gears for rotating primary and secondary arms in response to the primary and secondary drive motors (Fig 3)
- this enables precise manoeuvrability of the end effector (Fig 2).

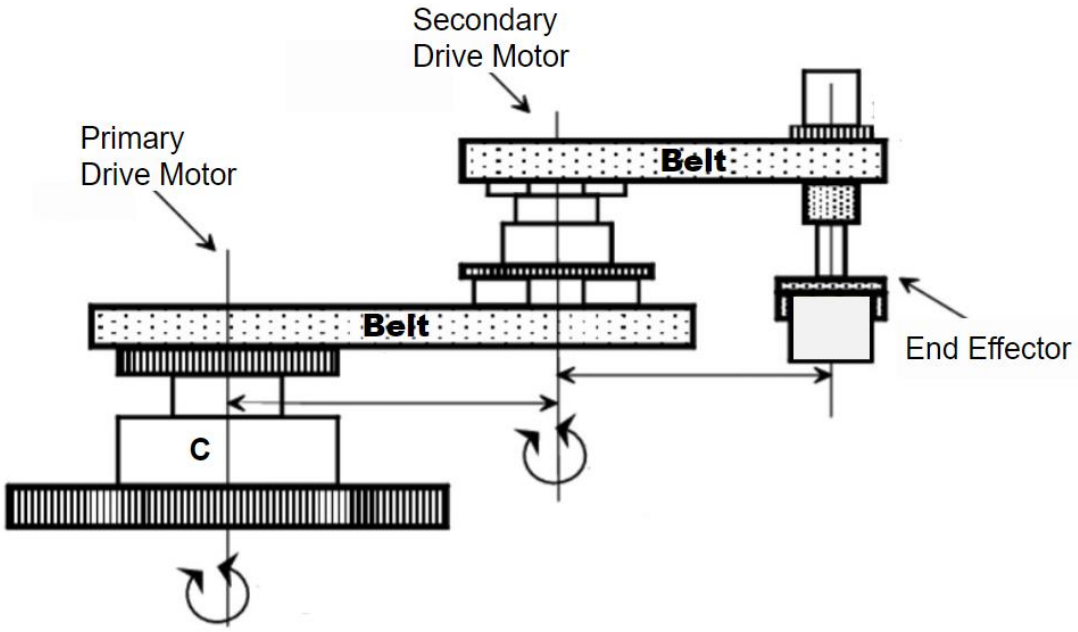

Figure 2 – System schematic

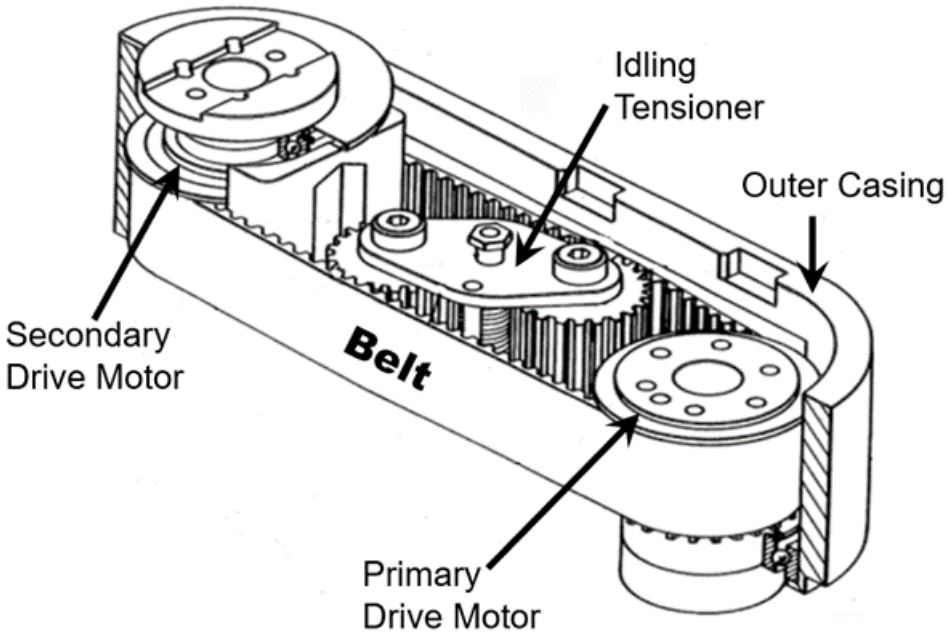

Figure 3 – Primary robotic arm assembly

Source: https://patents.google.com/patent/US4693666A/en?oq=us4693666

Design Criteria

When in normal operation, the primary robotic arm assembly shown in Figure 3 should function as follows:

- the bidirectional toothed belt is driven by motors
- a tensioning idler device is positioned within the belt loop to maintain operational tension
- the belt rotates via toothed pulleys and moves in both directions
- the sealed outer casing provides protection for the drive belt and motors.

You must:

- plan the maintenance required
- perform the maintenance activities, including diagnosing any faults and performing subsequent repairs
- review and report the findings of the maintenance completed.

This assignment has a time allocation of **22 hours**.

4. Tasks

Task 1 – Plan the maintenance activities

You must analyse the brief and technical information about the system provided and then:

a) create a list of the requirements and resources for the maintenance activities, justifying your selections. This should include:
   - all necessary technical information to confirm the type, scope and requirements of the activity
   - tools and equipment
   - materials, components and consumables
   - wastage and disposal requirements
   - time needed to carry out the activity
   - fault diagnosis methods to be used
   - any access requirements

b) produce and complete a risk assessment

c) produce a method statement.

Conditions of assessment:

- the time allocated for this task is **5 hours**
- you must carry out the task on your own, under **controlled conditions** while being observed.

Controlled conditions:

- you must only work on your tasks in the allocated times
- assessment evidence must be handed in at the end of each session for secure storage which cannot be accessed
- you must not share or discuss your work with other candidates
- you are **not** permitted to bring any materials into the assessment session.

What must be produced for marking:

- a list of requirements and resources, including justification for the selections
- completed risk assessment
- method statement.

Resources:

- access to relevant information sources (digital or hard copy), including Figures 1 - 3
- an appropriate robotic arm system and electrical supply to suit the needs of the system
- working area to complete relevant risk assessment
- a range materials, components and consumables to select from, including personal protective equipment (PPE)
- a range of measurement, fault diagnosis and test equipment to select from
- a range of relevant tools for disassembly, reassembly, installation and repair to select from
- appropriate ICT equipment and software.

Task 2 – Performing the maintenance activities.

You must:

a) prepare the work area for the maintenance activities

b) perform the maintenance activities in accordance with the method statement and planning documents produced in Task 1. This should include:
   - decommissioning and inspection of the system
   - disassembly and reassembly of the system
   - diagnosing and recording faults within the system, including carrying out appropriate tests
   - repairing faults and replacing components as required
   - safely using the appropriate tools and equipment
   - recommissioning of the system
   - demonstration of system functionality to the client
   - re-instating the work area

c) record the maintenance activities, to include:
   - completed test record sheets
   - updated maintenance records and control documents
   - annotated method statement, including any recommendations for further investigation if required.

Conditions of assessment:

- the time allocated for this task is **11 hours**
- you must carry out the task on your own, under controlled conditions while being observed
- you will be given copies of your completed documentation from Task 1.

Controlled conditions:

- you must only work on your tasks in the allocated times
- assessment evidence must be handed in at the end of each session for secure storage which cannot be accessed
- all practical work areas and any evidenced produced must be kept secure and only accessible by the assessor
- you must not share or discuss your work with other candidates
- you are not permitted to bring any materials into the assessment session.

What must be produced for marking:

- completed test record sheets
- updated maintenance records and control documents
- annotated method statement, including any recommendations for further investigation if required.

Additional evidence for this task:

- assessor observations of the work area preparation
- assessor observations of the maintenance activities
- assessor observation of system functionality demonstration.

To support the comments made within the Practical Observation the assessor must capture the following photographs that must be submitted as supporting evidence for each candidate.

Photographic evidence which shows:

- the prepared work area
- the working area after disassembly
- the re-assembled system
- the re-instated work area.

Resources:

- copies of completed planning documentation from Task 1
- access to relevant information sources (digital or hard copy), including Figures 1 - 3
- an appropriate robotic arm system and electrical supply to meets the needs of the system
- working area
- appropriate PPE
- an appropriate robotic arm system and electrical supply to suit the needs of the system
- a range materials, components and consumables
- a range of measurement, fault diagnosis and test equipment
- a range of relevant tools for disassembly, reassembly, installation and repair
- appropriate components to replace faulty items
- appropriate ICT equipment and software.

Task 3a – Review and report the maintenance activities

You must:

a) produce a technical report for the supervisor. This should typically be 850 words and include:
   - a review of the maintenance activities, including fault diagnosis/detection techniques and suggestions for future improvements
   - the faults found and how they were rectified
   - any outstanding faults, including recommendations that may require attention before the next planned maintenance activity according to the current maintenance schedule
   - reporting of stock levels and waste disposal

b) produce a revised maintenance schedule from your activities and findings, this should include:
   - recommendations for future planned maintenance including justifications
   - due date of next maintenance activity.

Conditions of assessment:

- the time allocated for this task is **3 hours**
- you must carry out the task on your own, under **controlled conditions** while being observed
- you will be given copies of your completed documentation from Tasks 1 and 2.

Controlled conditions:

- you must only work on your tasks in the allocated times
- assessment evidence must be handed in at the end of each session for secure storage which cannot be accessed
- you must not share or discuss your work with other candidates
- you are not permitted to bring any materials into the assessment session.

What must be submitted:

- a technical report
- revised maintenance schedule, including justifications.

Resources

- copies of completed planning documentation from Tasks 1 and 2
- access to relevant information sources (digital or hard copy), including Figures 1 - 3
- appropriate ICT equipment and software.

Task 3b – Peer review

Your revised maintenance schedule will now be reviewed by two peers to provide you with feedback. You will also peer review two maintenance schedules. The assessor will distribute the maintenance schedules to review and provide peer review forms for you to complete the written feedback.

a) carry out a peer review on two maintenance schedules provided by your assessor. You must consider the following:
   - *how well does the schedule enable planned maintenance activities to be performed and recorded over time?*
   - *how appropriate are the recommended planned maintenance intervals and why?*
   - *what are the implications to the business of the proposed maintenance schedule?*

b) how could the maintenance schedule be optimised/ improved?

c) write up feedback for each of the maintenance schedules on separate peer review forms

d) update your maintenance schedule following feedback from the peer review. Any updates need to include justifications for these changes and any changes not made will be reviewed in the handover.

Conditions of assessment:

- the time allocated for this task is **2 hours**:
  a) 30 minutes to complete a review of two maintenance schedules
  b) 30 minutes to write up feedback on a peer review form for each maintenance schedule
  c) 1 hour to independently update your maintenance schedule justifying any changes made.
- you must carry out the task on your own, under **controlled conditions** while being observed
- the peer reviewers will be providing written feedback using the peer review form provided by the assessor on any aspect of the maintenance schedule for you to reflect on and respond to.

Controlled conditions:

- you must only work on your tasks in the allocated times
- assessment evidence must be handed in at the end of each session for secure storage which cannot be accessed
- you must not share or discuss you work with other candidates
- you are not permitted to bring any materials into the assessment session.

For parts a) and b) **peer reviewers** must:

- manage your time effectively
- respond constructively and fairly
- ensure the feedback review form is completed fully and handed to the assessor.

For part c) **candidates** must:

- reflect on and respond to the feedback provided on the peer review feedback form to update your maintenance schedule.

What must be submitted:

- completed peer review forms.

Resources

- copies of completed documentation from Tasks 1, 2 and 3a
- two completed peer review forms
- access to relevant information sources (digital or hard copy), including Figures 1 - 3

- appropriate ICT equipment and software.

Task 4 – Complete handover

You must now hold a meeting with the client to complete handover procedures, including:

- confirmation of work completed
- amended maintenance schedule and how they addressed peer review feedback, including any suggested changes that were not made and why
- appropriate handover documentation.

Conditions of assessment:

- the time allocated for this task is **1 hour**:
  - 30 minutes to prepare for the handover meeting and 30 minutes to carry out the handover meeting
- you must carry out the task on your own, under **controlled conditions** while being observed
- you will be given copies of your completed documentation from Tasks 1, 2 and 3
- you must carry out the handover meeting, with the assessor taking the part of your supervisor
- there will be no interaction required or permitted with your assessor as part of the handover.

Controlled conditions:

- you must only work on your tasks in the allocated times
- assessment evidence must be handed in at the end of each session for secure storage which cannot be accessed
- all practical work areas and any evidenced produced must be kept secure and only accessible by the assessor
- you must not share or discuss your work with other candidates
- you are not permitted to bring any materials into the assessment session.

What must be produced for marking:

- handover documentation.

Additional evidence that must be captured for marking

- assessor observations of the handover meeting.

To support the comments made within the Practical Observation the assessor must capture the following video that must be submitted as supporting evidence for each candidate.

Video evidence which shows:

- handover meeting with the client, maximum 30 minutes.

Resources:

- copies of completed documentation from Tasks 1, 2 and 3, including the two completed peer review forms
- access to relevant information sources (digital or hard copy), including Figures 1 - 3
- the robotic arm system maintained in Task 2 and electrical supply to suit the needs of the system.

End of assessment

The T Level is a qualification approved and managed by the Institute for Apprenticeships and Technical Education.

Copyright in this document belongs to, and is used under licence from, the Institute for Apprenticeships and Technical Education, © 2025. 'T-LEVELS' is a registered trademark of the Department for Education. 'T Level' is a registered trademark of the Institute for Apprenticeships and Technical Education. 'Institute for Apprenticeships & Technical Education' and logo are registered trademarks of the Institute for Apprenticeships and Technical Education.

We make every effort to ensure that the information contained in this publication is true and correct at the time of going to press. However, City & Guilds' products and services are subject to continuous development and improvement, and the right is reserved to change products and services from time to time. City & Guilds cannot accept responsibility for any loss or damage arising from the use of information in this publication.

The City & Guilds of London Institute. All rights reserved. City & Guilds is a trademark of the City & Guilds of London Institute, a charity established to promote education and training registered in England & Wales (312832) and Scotland (SC039576). City and Guilds Group Giltspur House, 5–6 Giltspur Street London EC1A 9DE