WORCESTER BOSCH CDi RSF VERTICAL FLUING OPTIONS

VERTICAL RSF FLUE

Flue Diameter - 100mm
Flue Terminal Assembly Diameter - 130mm
Minimum Flue Duct Length - 125mm
Maximum Flue Duct Length - 4000mm 24CDi, 3500mm 28CDi
Flue Terminal Assembly Length - 1100mm

Options 1 to 6 illustrate the complete vertical balanced flue assembly for pitched roof and flat roof installations respectively.

Option 1 VERTICAL BALANCED FLUE SYSTEM. MAXIMUM HEIGHT.

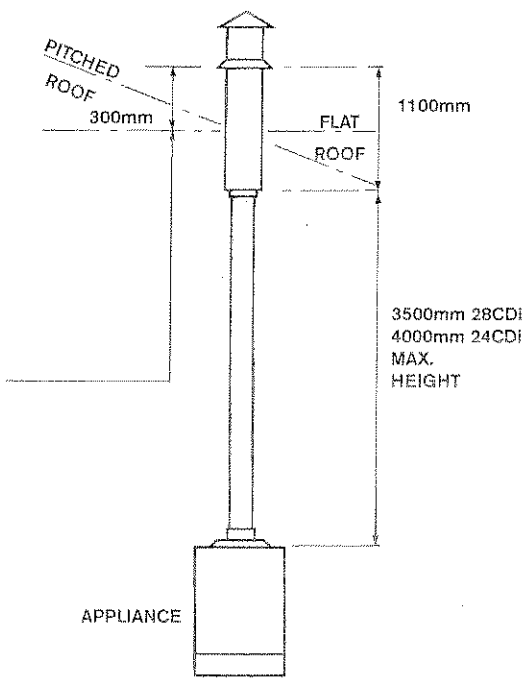

FLUE COMPONENTS REQUIRED

Quantity		Worcester Part No.	Description
28CDi	24CDi		
1	1	7716 191 011	Vertical Flue Kit
4	5	7716 191 010	Flue Extension

MINIMUM HEIGHT.

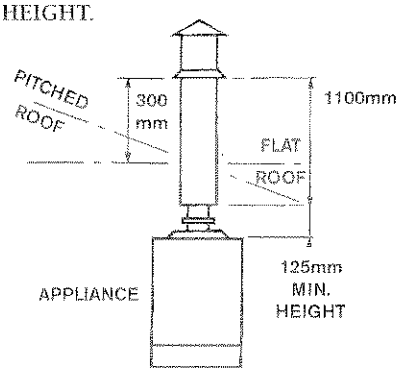

FLUE COMPONENTS REQUIRED

24 & 28CDi Quantity	Worcester Part No.	Description
1	7716 191 011	Vertical Flue Kit

Vertical Balanced Flue Kit

Comprises:
1 x Flue Terminal Assembly, 500mm Flue/Air Duct,
1 x Weather Sealing Collar, 1 x Flue Support,
1 x Flue Adaptor, 1 x Flue Duct Support Bracket,
1 x Flue Terminal Support Bracket, 1 x Fire Stop Spacer,
1 x Wall Band.
} Part No. 7716 191 011

Accessories

Extension Flue Kit 840mm long	Part No. 7716 191 010
90° Elbow	Part No. 7716 191 013
45° Elbow	Part No. 7716 191 014

Note: The roof flashing tile is not supplied by Worcester Heat Systems.

Option 2 VERTICAL BALANCED FLUE SYSTEM WITH AN OFFSET AND FLUE BEND DIRECTLY ON TOP OF THE APPLIANCE.

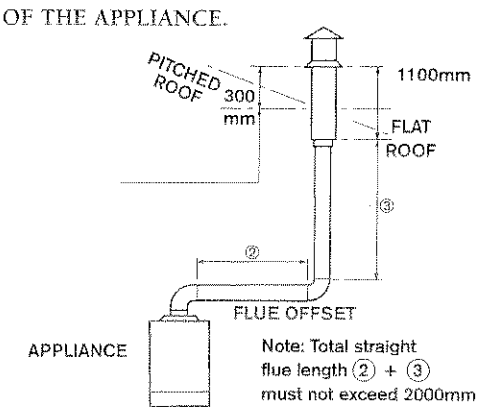

FLUE COMPONENTS REQUIRED

24 & 28CDi Quantity	Worcester Part No.	Description
1	7716 191 009	Standard Flue Kit
Up to 2	7716 191 010	Flue Extension
1	7716 191 013	90° Elbow
1	7716 191 011	Vertical Flue Kit

Option 3 VERTICAL BALANCED FLUE SYSTEM WITH AN OFFSET AND VERTICAL SECTION DIRECTLY ON TOP OF THE APPLIANCE.

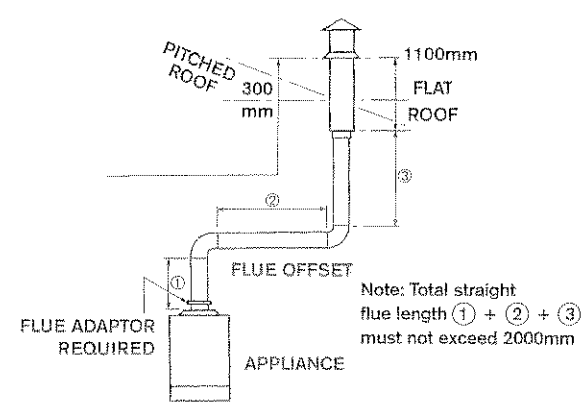

FLUE COMPONENTS REQUIRED

24 & 28CDi Quantity	Worcester Part No.	Description
1	7716 191 011	Vertical Flue Kit
2	7716 191 013	90° Elbow
Up to 2	7716 191 010	Flue Extension

Option 7 VERTICAL BALANCED FLUE SYSTEM, WITH TWO 45° BENDS.

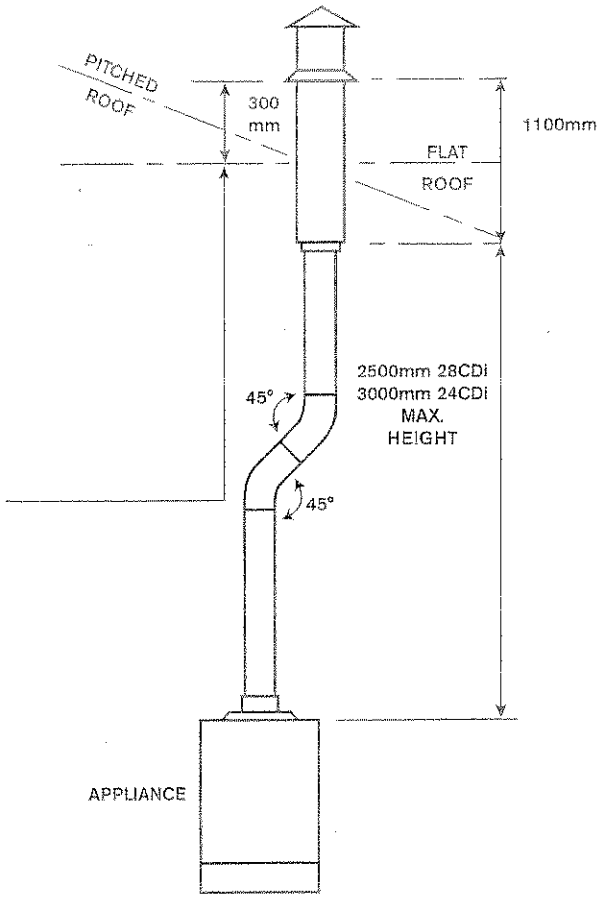

FLUE COMPONENTS REQUIRED

Quantity		Worcester Part No.	Description
28CDi	24CDi		
1	1	7716 191 011	Vertical Flue Kit
Up to 3	Up to 4	7716 191 010	Flue Extension
2	2	7716 191 014	45° Elbow

Note: 1. When choosing the flue length required, always measure to the outside of the wall where the flue terminal will be fixed.
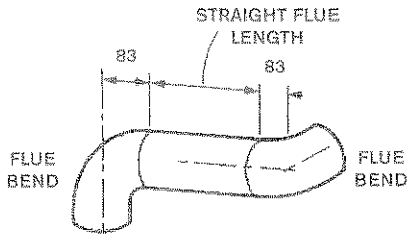
2. When measuring between the centre lines of flue ducts, allow 83mm for each flue bend.